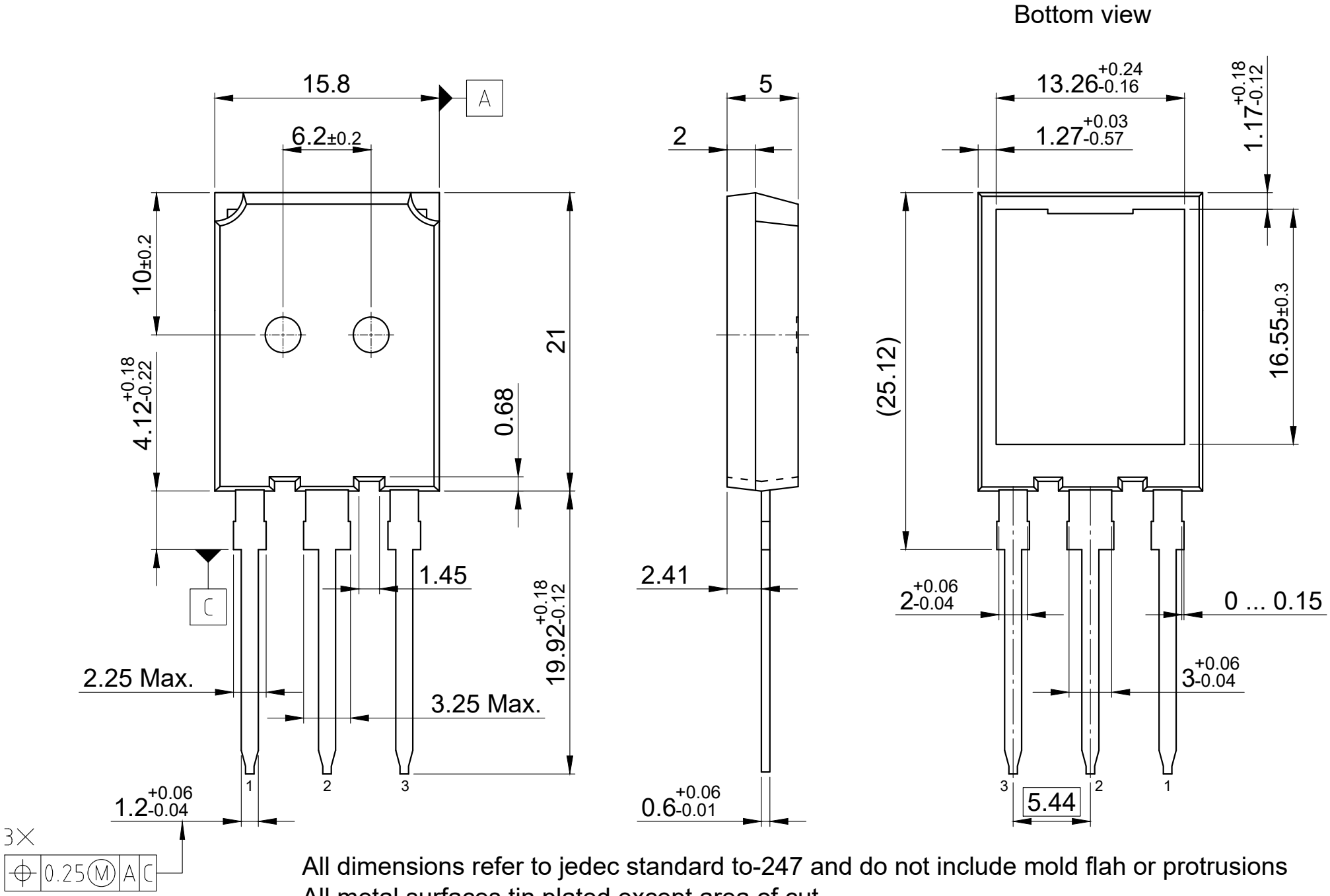

All dimensions refer to jedec standard to-247 and do not include mold flah or protrusions
All metal surfaces tin plated except area of cut
All dimensions are in units mm
The drawing is in compliance with ISO 128-30, Projection Method 1 [ ]
Drawing according to ISO 8015, general tolerances ISO 2768-mK