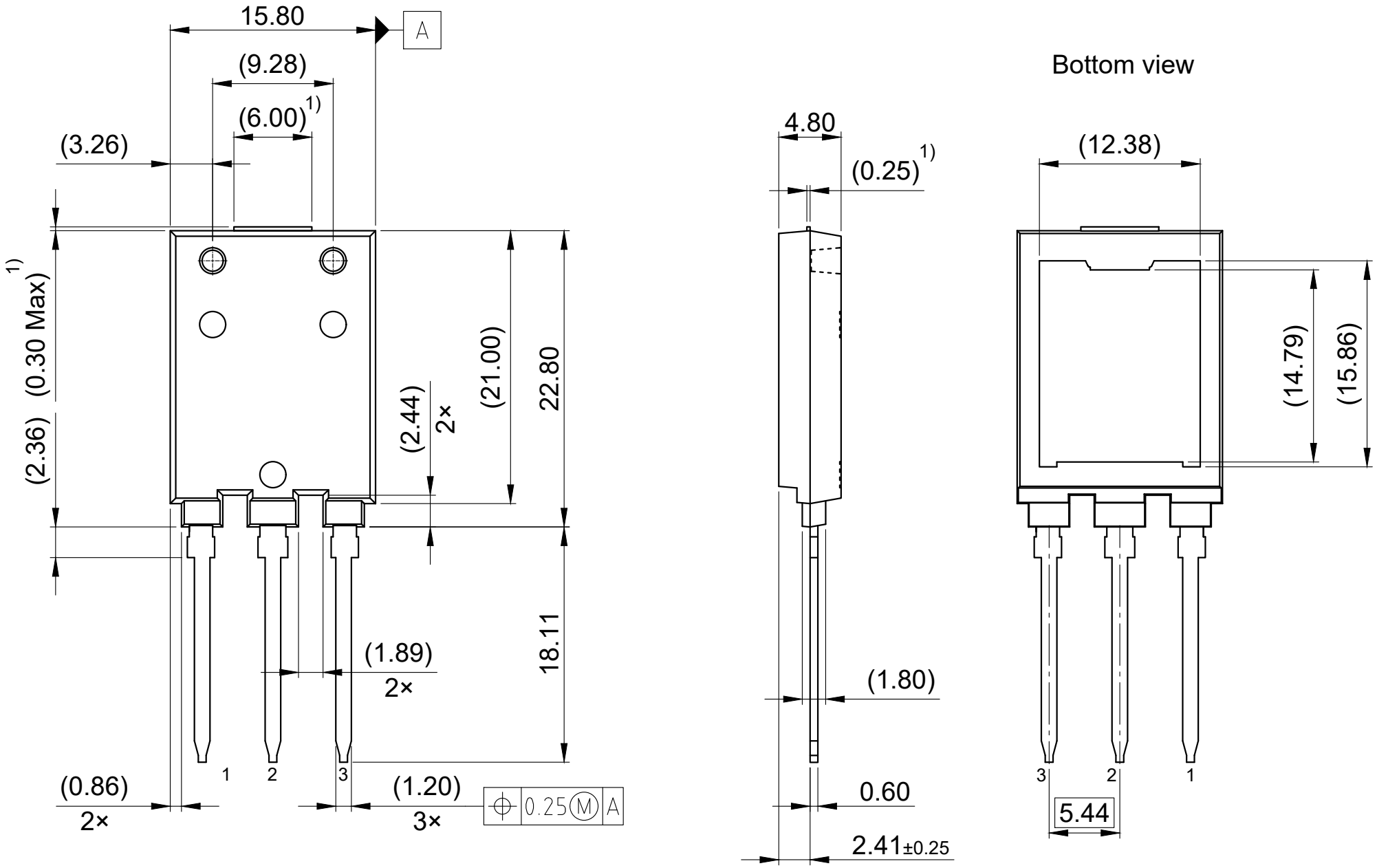

1) Mold gate protrusion after degating.
All dimensions are in units mm
The drawing is in compliance with ISO 128-30, Projection Method 1 [ ]
Drawing according to ISO 8015, general tolerances ±0.1;±1°30'