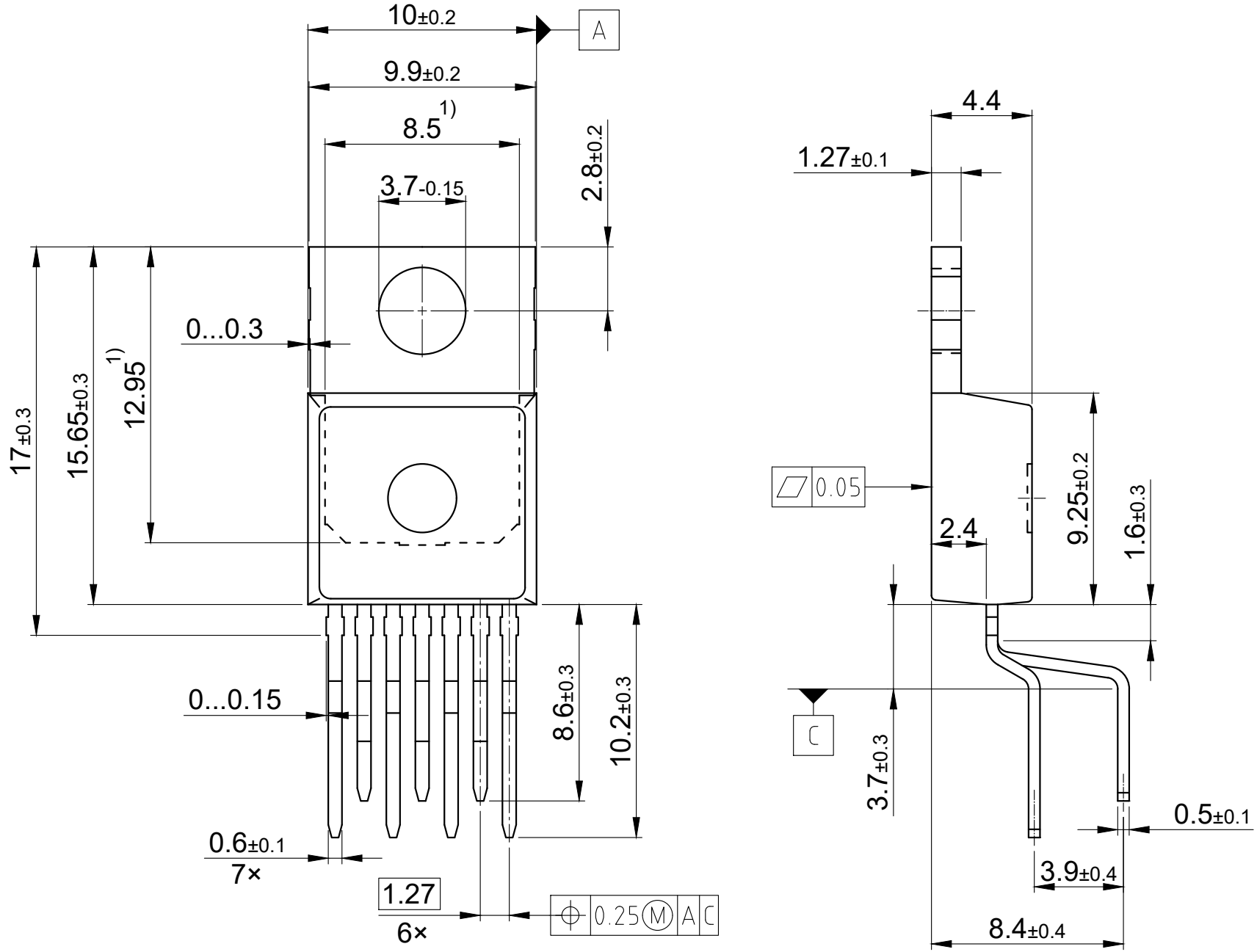

1) Typical metal surface min. x= 7.25,y= 12.3

All metal surfaces: tin plated, except area of cut

All dimensions are in units mm

The drawing is in compliance with ISO 128-30, Projection Method 1 [ ]

Drawing according to ISO 8015,general tolerances ±0,1; ±1°30