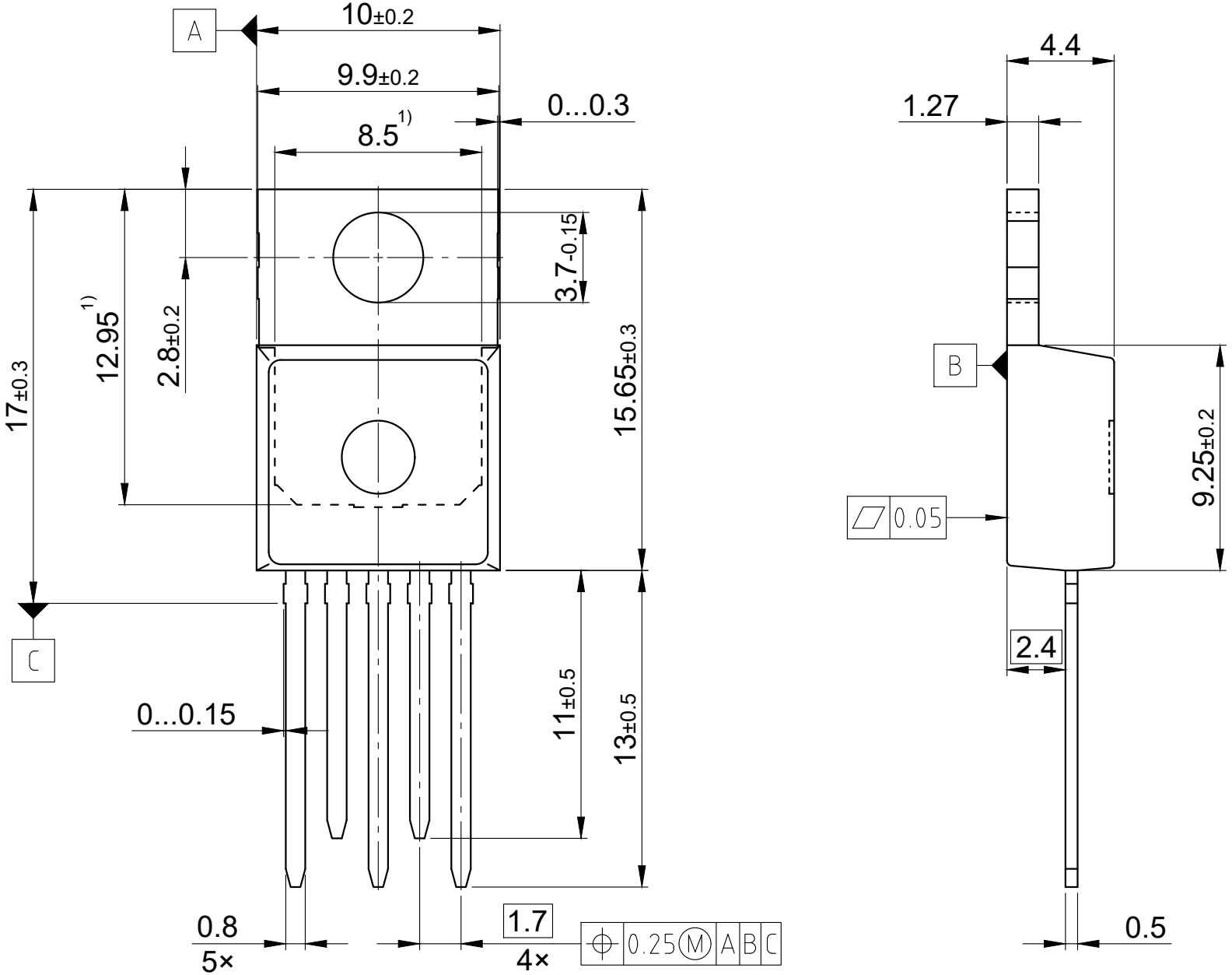

1) Typical metal surface min. X= 7.25, Y= 12.3
All metal surfaces: tin plated, except area of cut
All dimensions are in units mm
The drawing is in compliance with ISO 128-30, Projection Method 1 [ ]
Drawing according to ISO 8015, general tolerances ±0,1; ±1°30