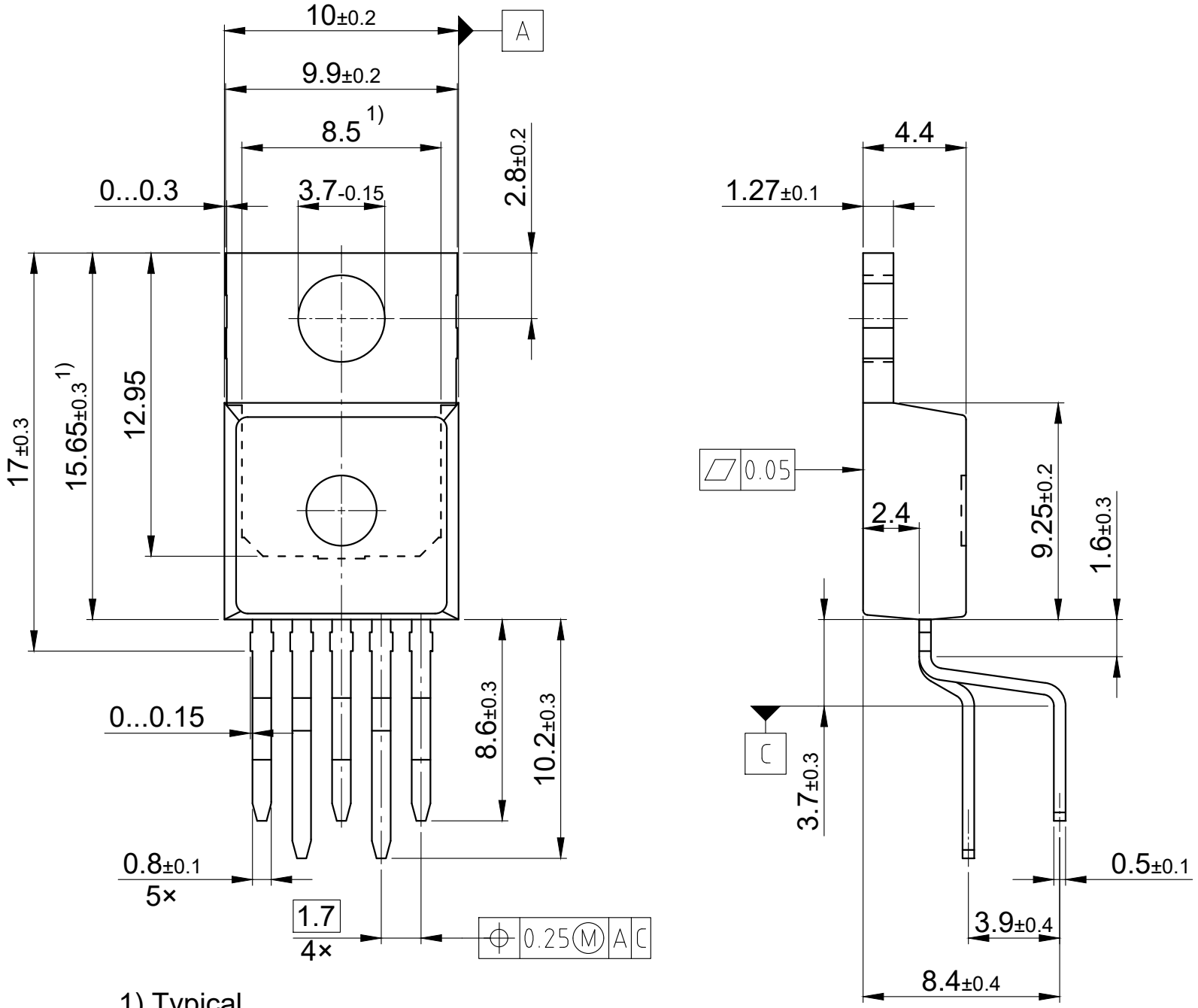

1) Typical

All metal surfaces: tin plated, except area of cut

All dimensions are in units mm

The drawing is in compliance with ISO 128-30, Projection Method 1 [ ]