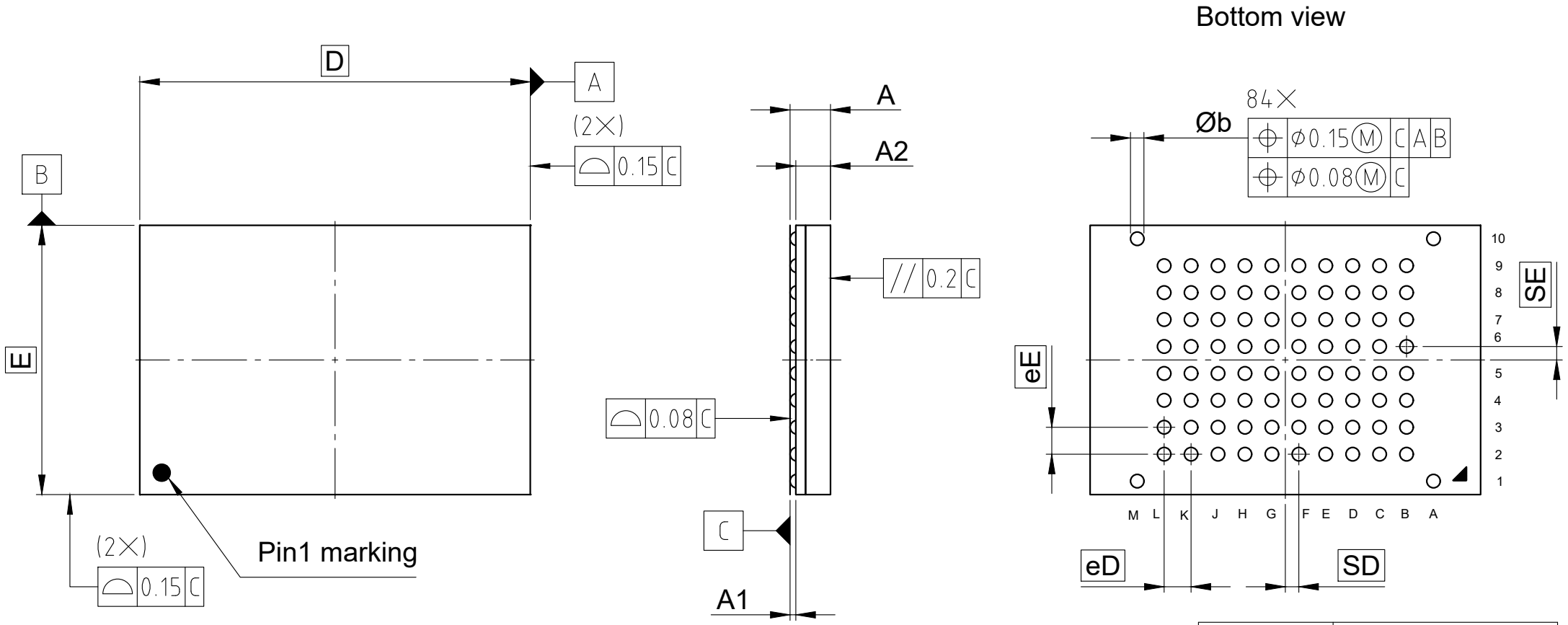

SYMBOL	DIMENSIONS		
	MIN.	NOM.	MAX.
A	-	-	1.2
A1	0.17	-	-
A2	0.81	-	0.97
D	11.6 BSC		
E	8 BSC		
Øb	0.35	0.4	0.45
eE	0.8 BSC		
eD	0.8 BSC		
SD/SE	0.4 BSC		

All dimensions are in units mm
The drawing is in compliance with ISO 128-30, Projection Method 1 [ ]
Dimensioning and tolerancing methods per ASME Y14.5M-1994.