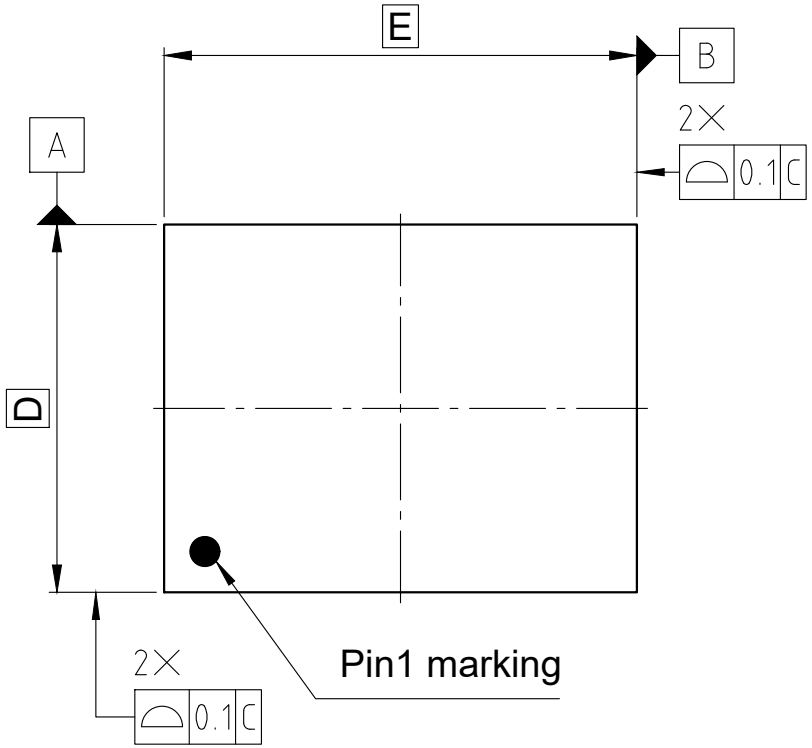

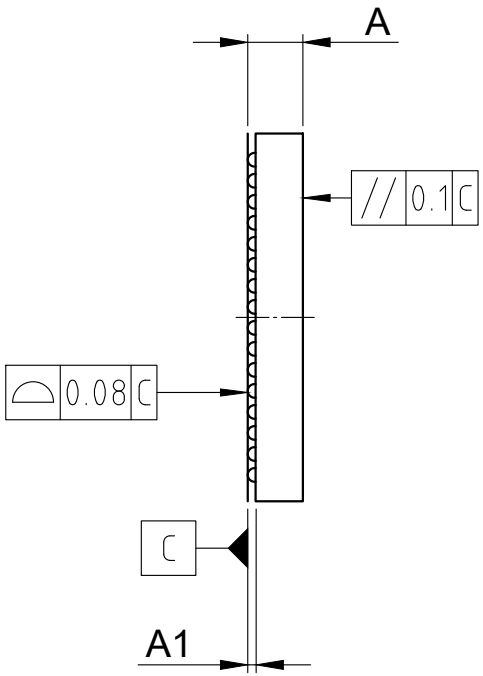

Bottom view

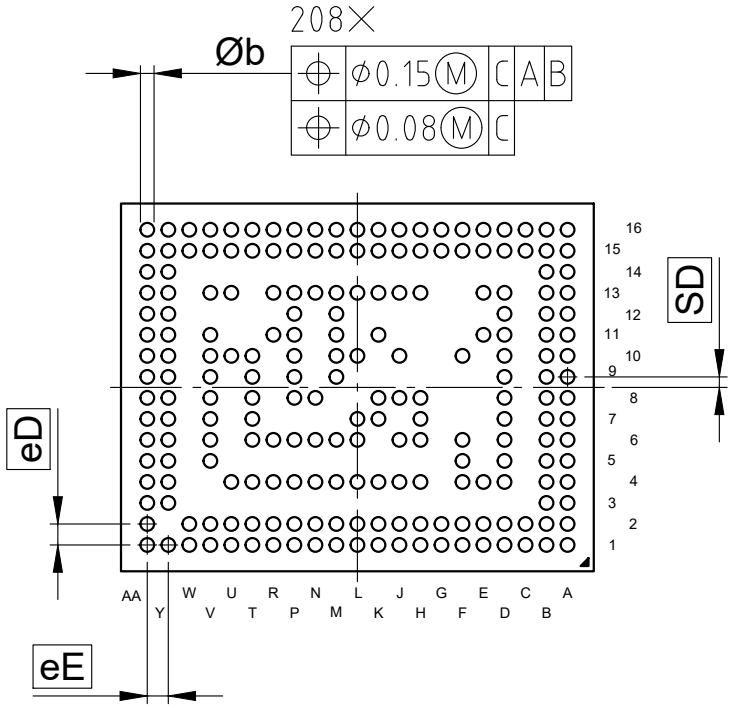

SYMBOL	DIMENSIONS		
	MIN	NOM	MAX
A	-	-	1.05
A1	0.15	-	-
D	7 BSC		
E	9 BSC		
Øb	0.21	0.26	0.31
eD	0.4 BSC		
eE	0.4 BSC		
SD	0.2 BSC		

All dimensions are in units mm

The drawing is in compliance with ISO 128-30, Projection Method 1 [ ]