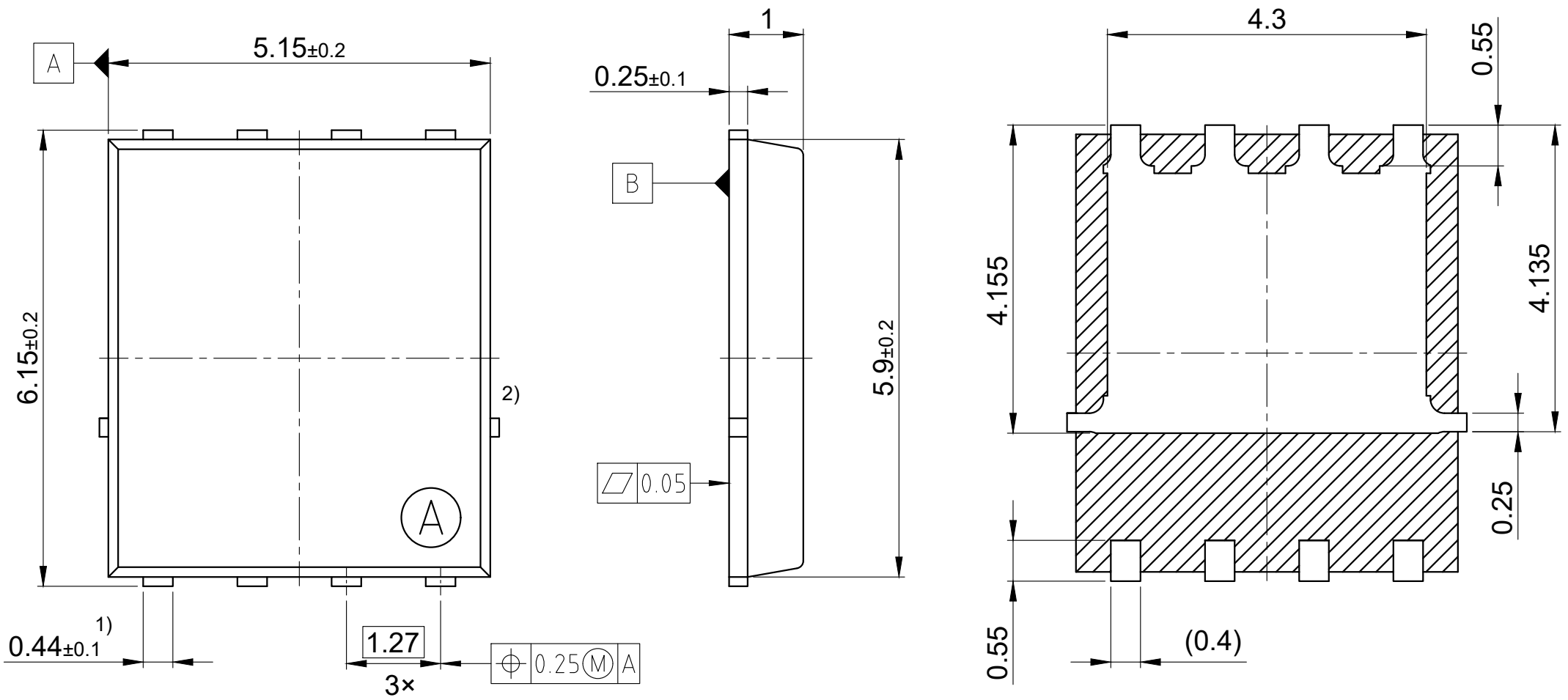

1) Exclude mold flash
2) Removal on mold gate, Intrusion 0.1mm
Protrusion 0.1mm

All dimensions are in units mm
The drawing is in compliance with ISO 128-30, Projection Method 1 [ ]