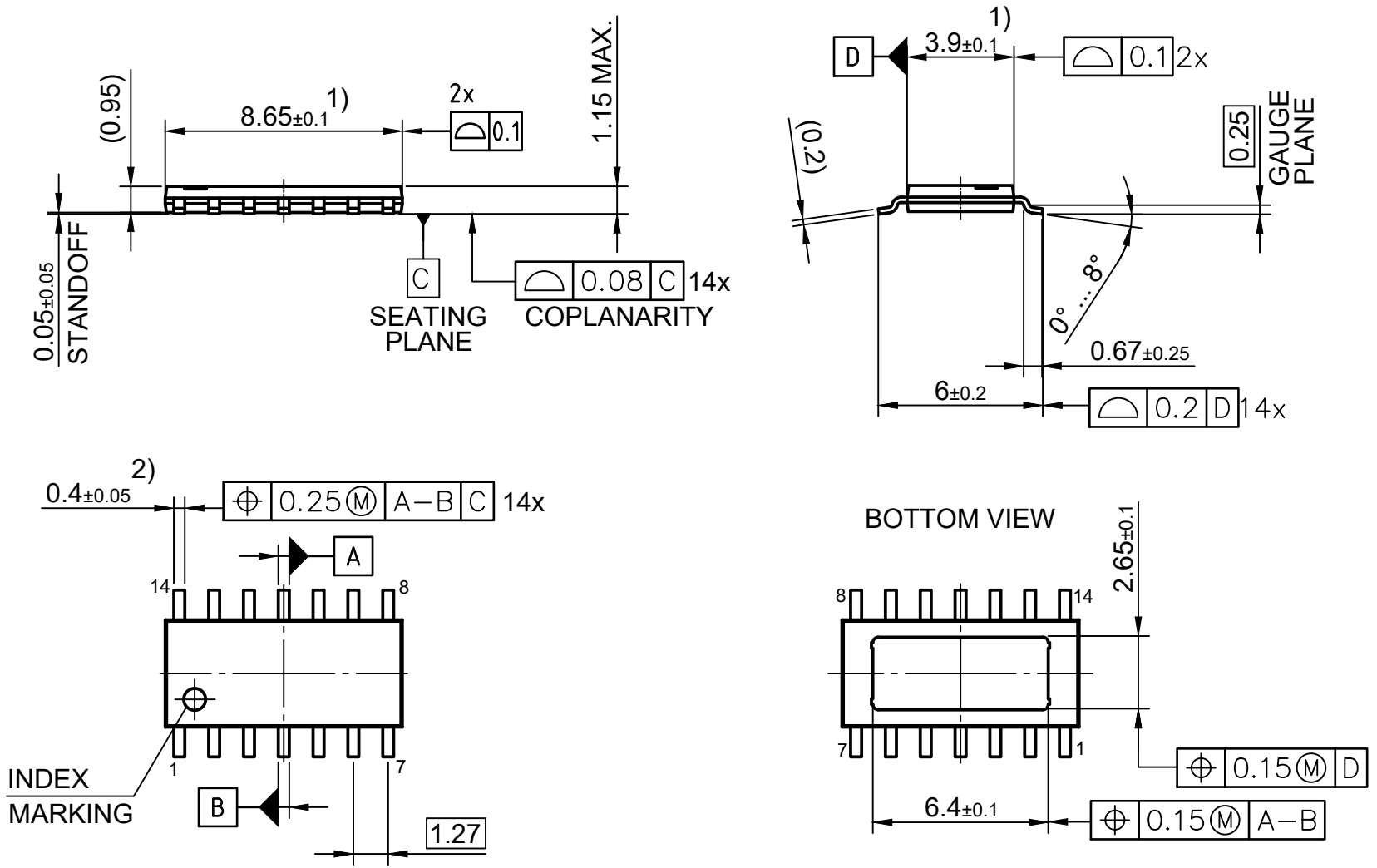

All dimensions are in units mm

The drawing is in compliance with ISO 128-30, Projection Method 1[ ]

1) Does not Include plastic or metal protrusion of 0.15 max. per side

2) Dambar protrusion shall be maximum 0.1mm total in excess of width lead width