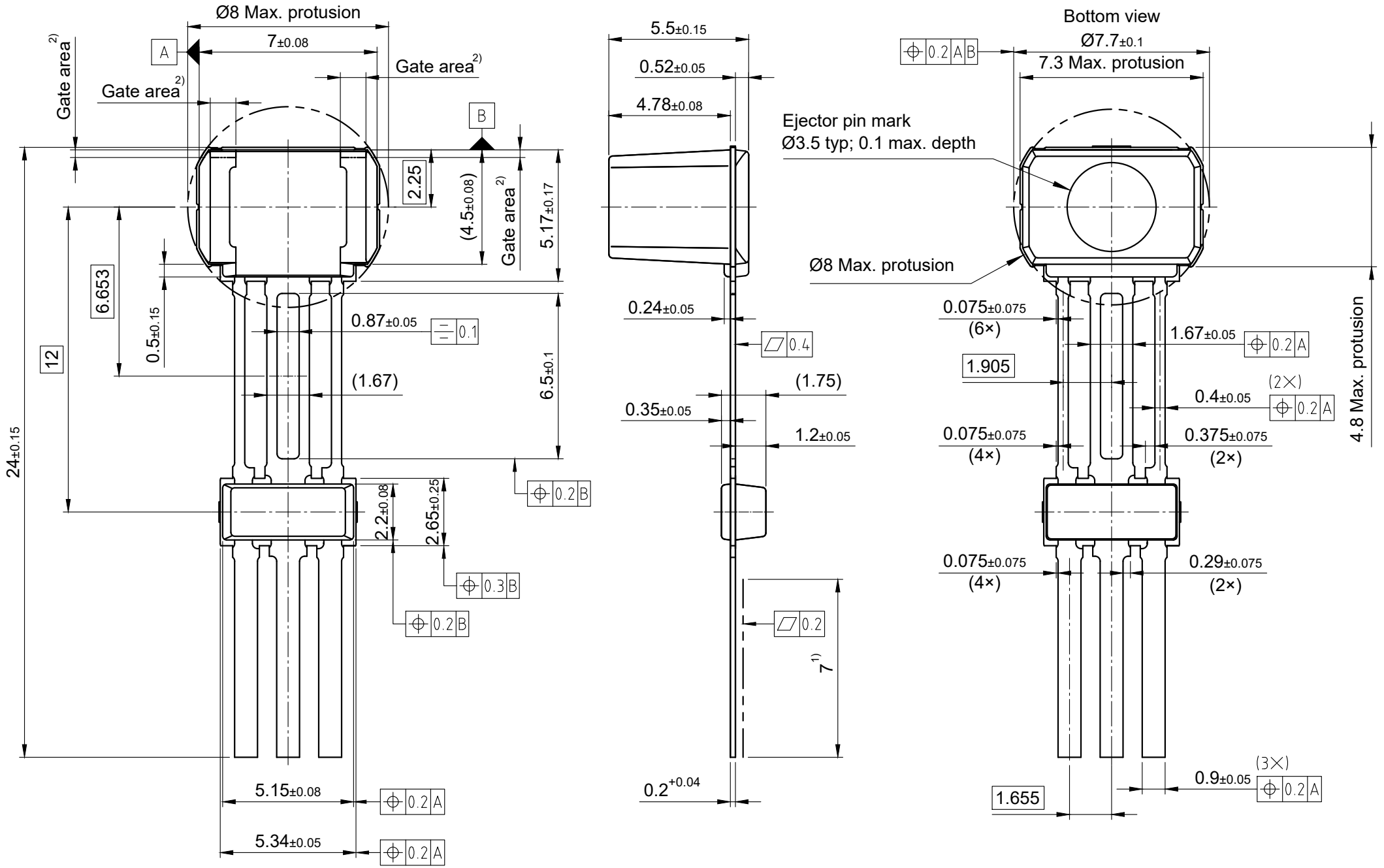

1) Measurement area for lead planarity of 0.2mm
2) The gate area is only one-time existing on the left or right side
All dimensions are in units mm
The drawing is in compliance with ISO 128-30, Projection Method 1 [ ]
Drawing according to ISO 8015, general tolerances