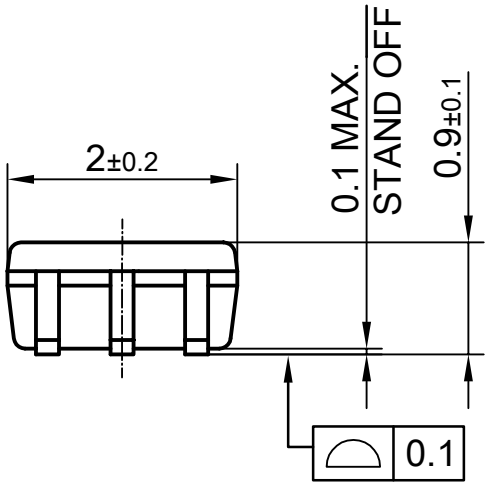


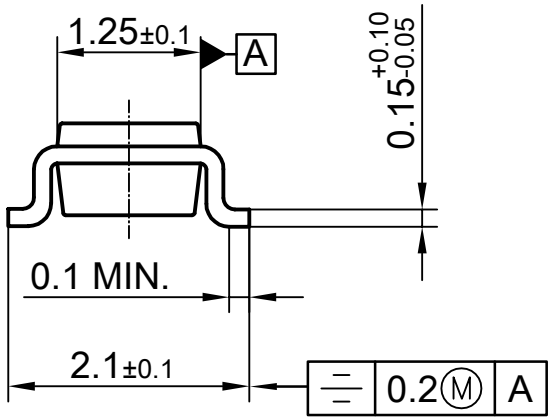


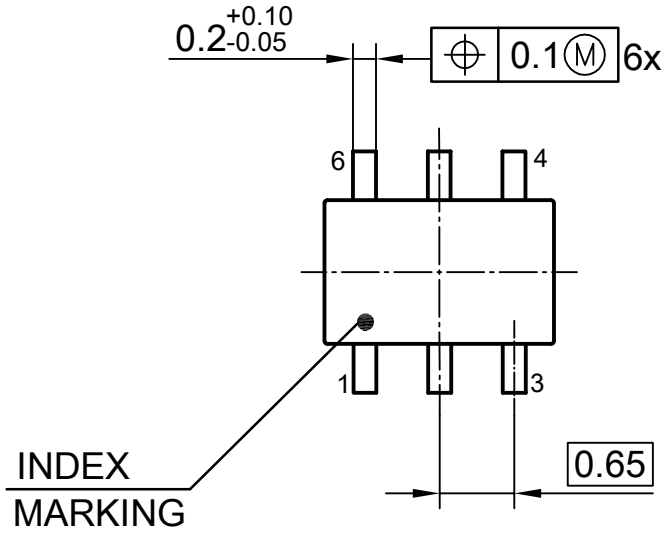


BOTTOM VIEW

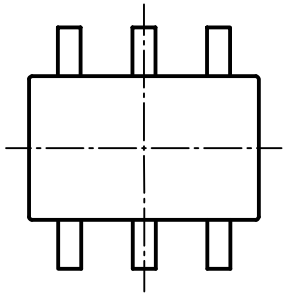

NOTE: MOLD FLASH, PROTUSIONS OR GATE BURRS OF 0.2 MM MAX. PER SIDE ARE NOT INCLUDED

ALL DIMENSIONS ARE IN UNITS MM

THE DRAWING IS IN COMPLIANCE WITH ISO 128 & PROJECTION METHOD 1 [ ]