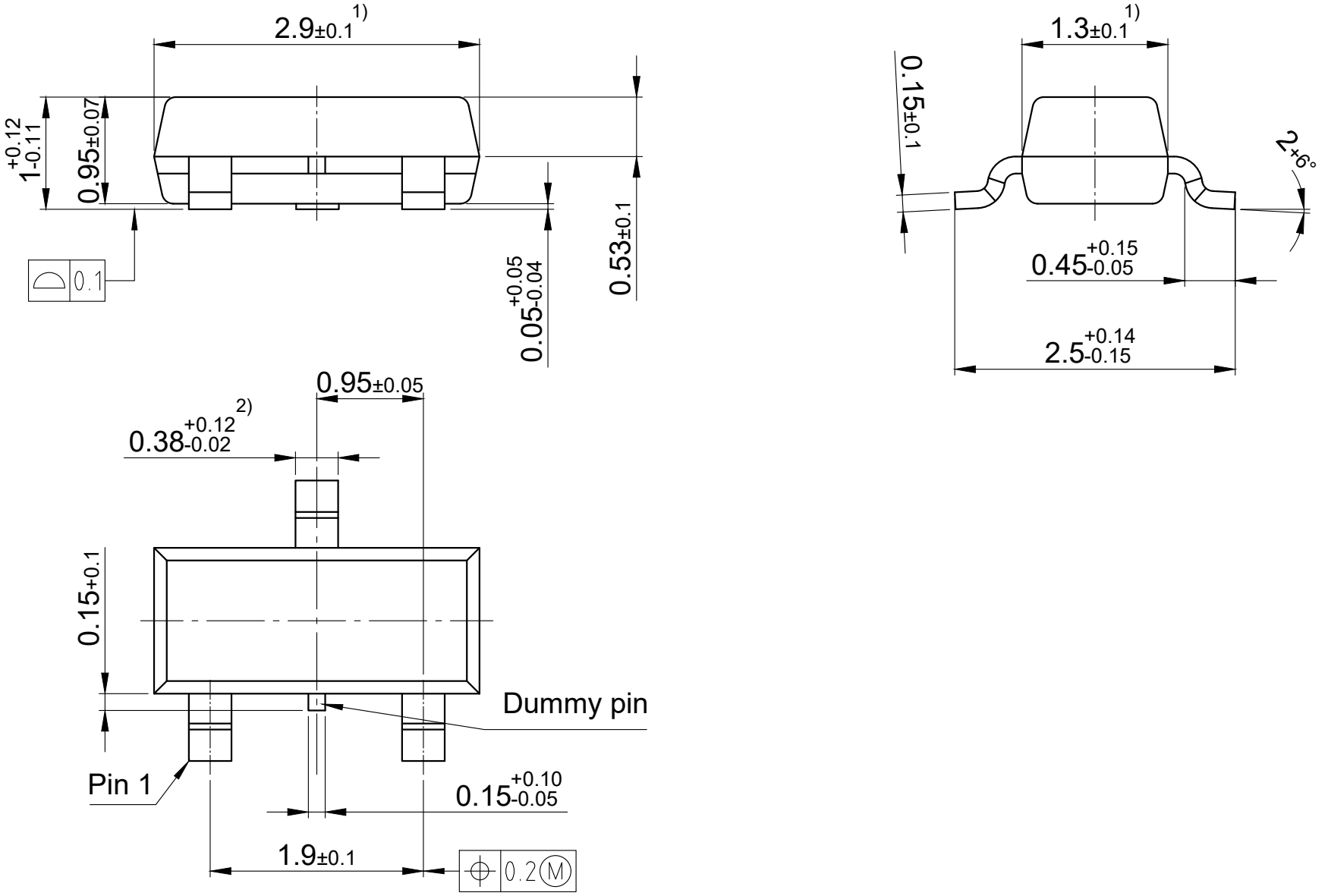

1) All dimensions refer to JEDEC standard TO-236 AB do not include mold flash or protrusions.
2) Dambar protrusion shall be 0.08mm total in excess of the lead width dimension at maximum material condition.
All dimensions are in units mm
The drawing is in compliance with ISO 128-30, Projection Method 1 [ ]
Drawing according to ISO 8015, general tolerances ISO 2768-mK