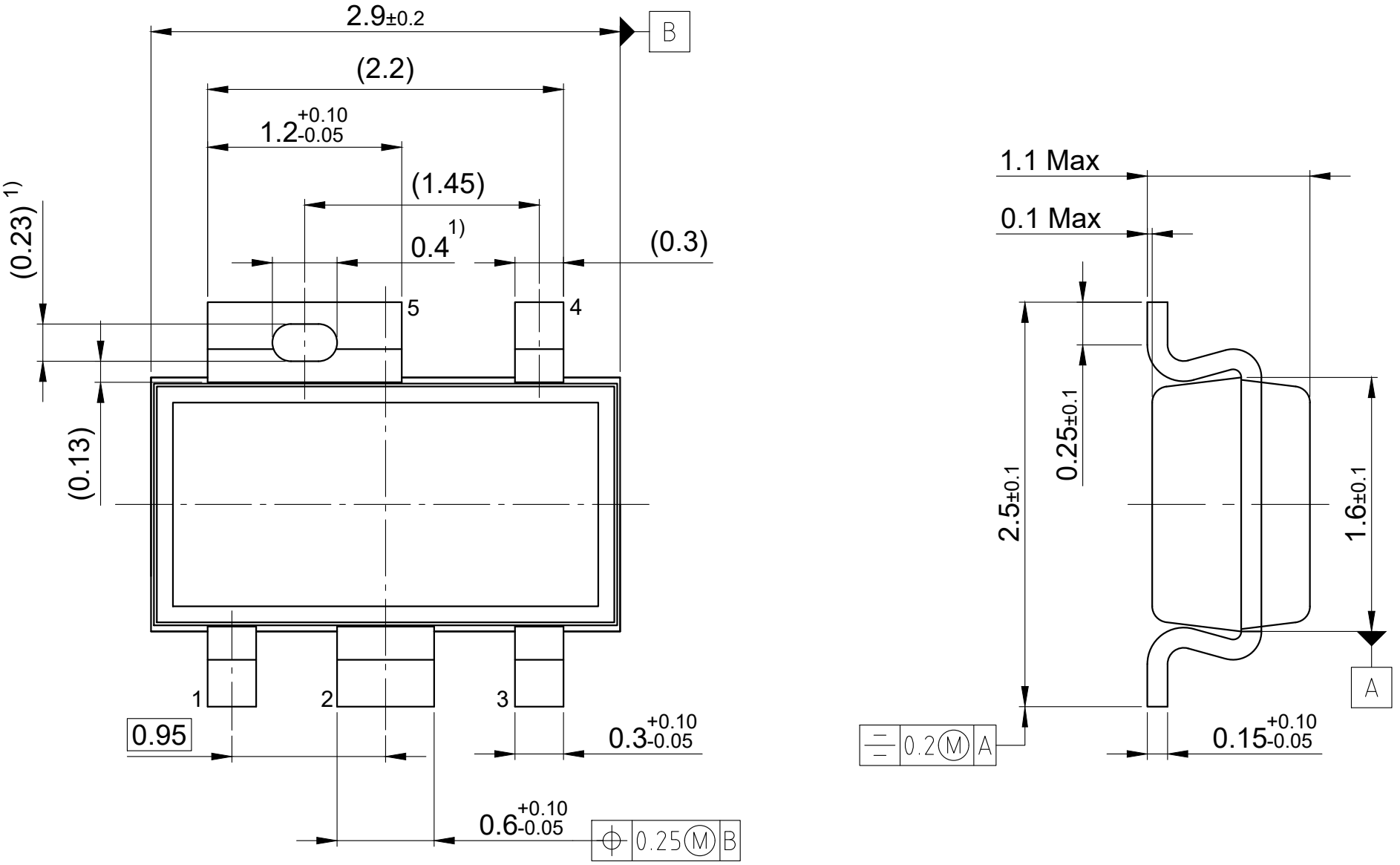

Note: Mold flash, protrusions or gate burrs of 0.2 mm maximum per side are not included
1) Contour of slot depends on profile of gull-wing lead form
All dimensions are in units mm
The drawing is in compliance with ISO 128-30, Projection Method 1 [ ]