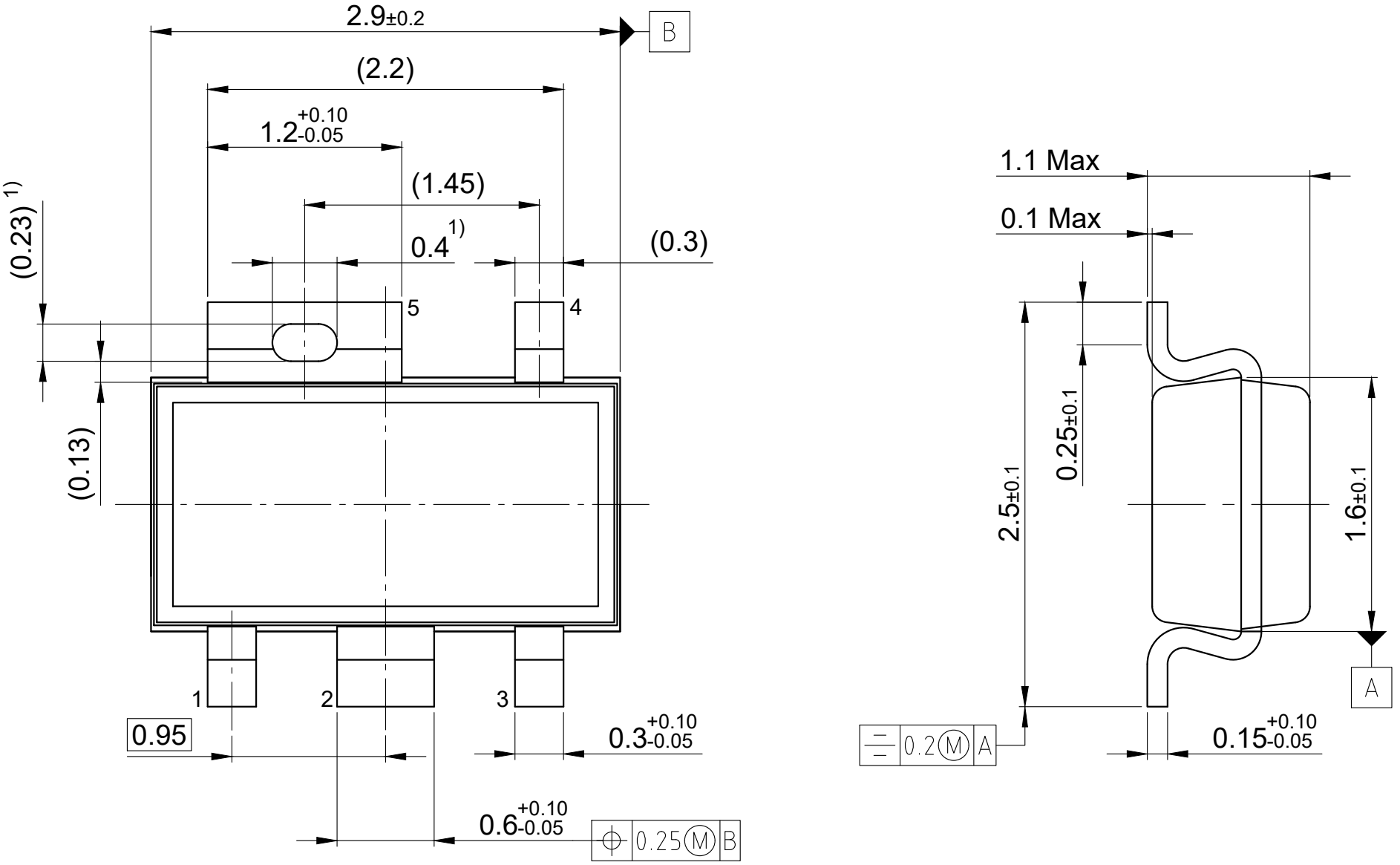

Note: Mold flash, protrusions or gate burrs of 0.2 mm maximum per side are not included

1) Contour of slot depends on profile of gull-wing lead form

All dimensions are in units mm

The drawing is in compliance with ISO 128-30, Projection Method 1 [ ]

Drawing according to ISO 8015, general tolerances ISO 2768-mk