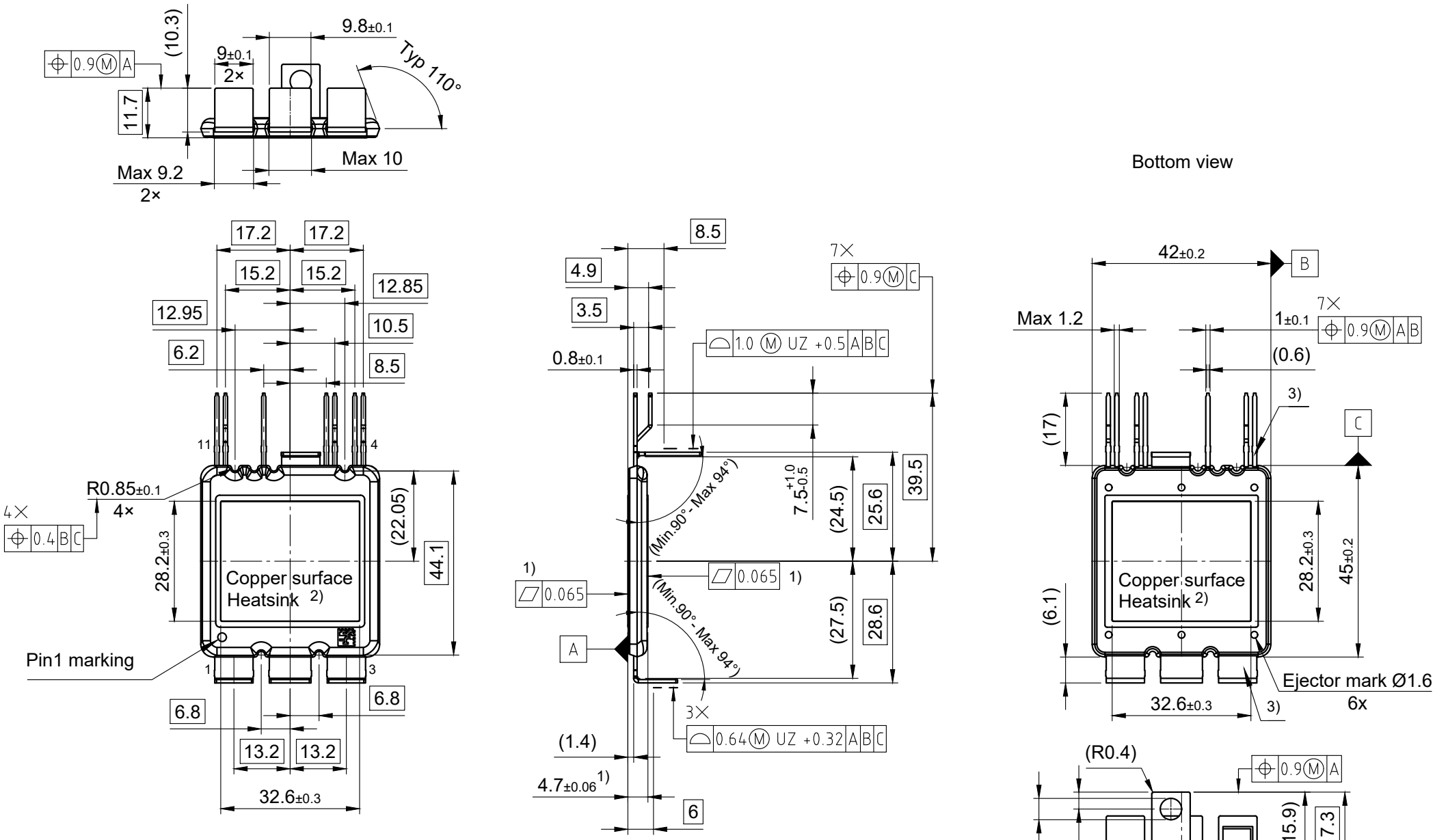

1) Tolerances for thickness and flatness can be adjusted according to requirements from the customers
2) Area free of mold compound, mold flashes max. 3.0mm
3) Sn plating on all pins except cutting areas
All dimensions are in units mm
The drawing is in compliance with ISO 128-30, Projection Method 1 [ ]
Drawing according to ISO 8015, general tolerances ISO 2768-mK