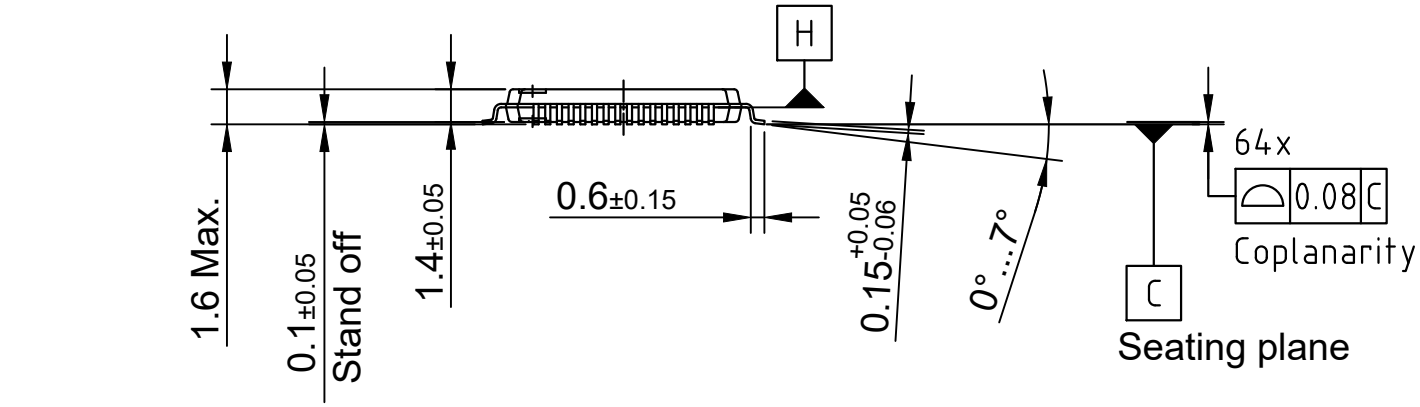

Top View

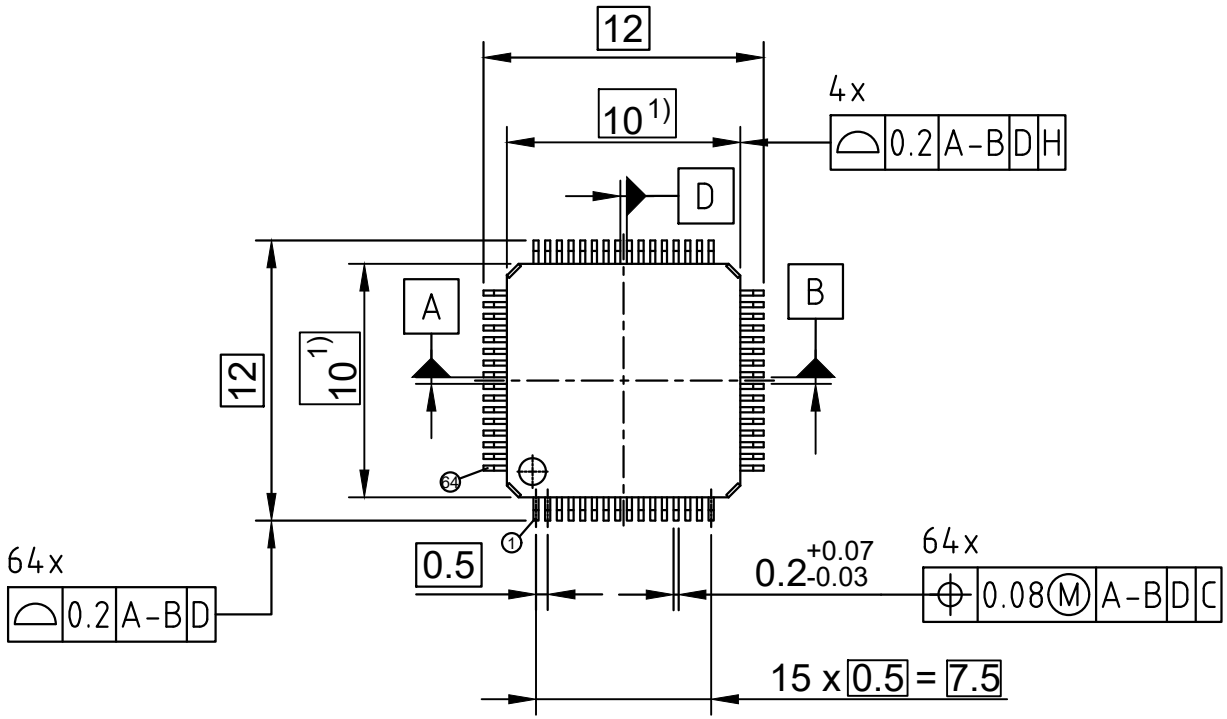

Bottom View

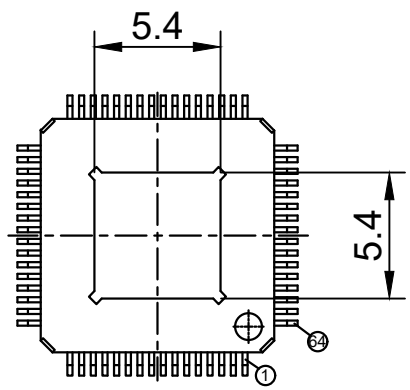

1) Does not include plastic or metal protrusion of 0.25 max. per side

All dimensions are in units mm

The drawing is in compliance with ISO 128-30, Projection Method 1 [ ]