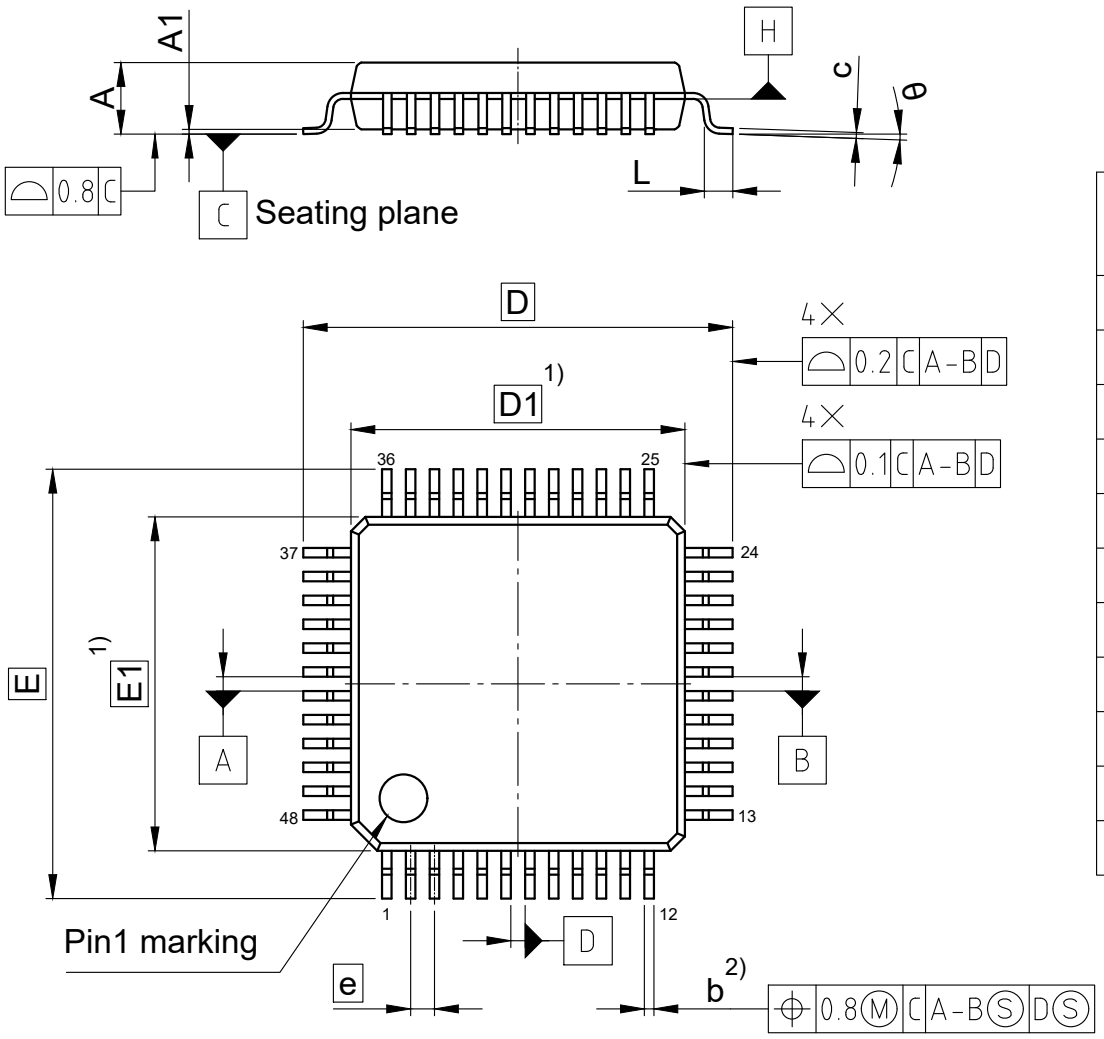

SYMBOL	DIMENSIONS		
	MIN.	NOM.	MAX.
A	-	-	1.7
A1	0	-	0.2
b	0.15	-	0.27
c	0.09	-	0.2
D	9 BSC		
D1	7 BSC		
e	0.5 BSC		
E	9 BSC		
E1	7 BSC		
L	0.45	0.6	0.75
θ	0°	-	8°

1) Dimensions D1 and E1 do not include mold protrusion.allowable protrusion is 0.25mm per side.
2) Dimension b does not include damber protrusion. the dambar protrusion(s) shall not cause the lead width to exceed b maximum by more than 0.08mm.
All dimensions are in units mm
The drawing is in compliance with ISO 128-30, Projection Method 1 [ ]