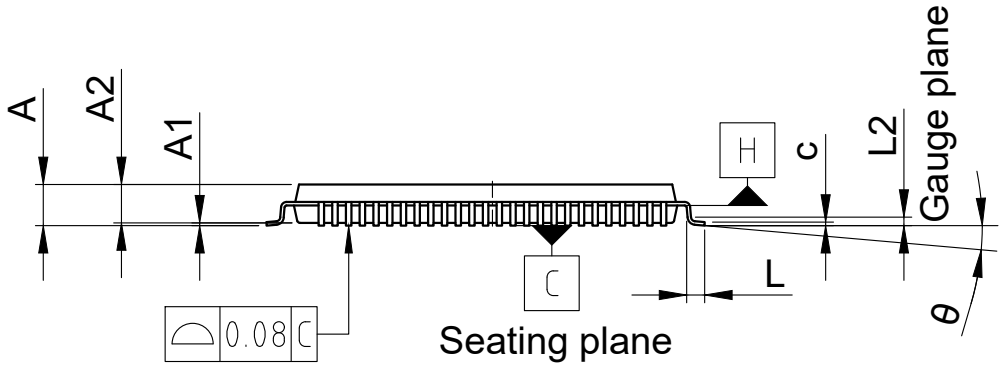

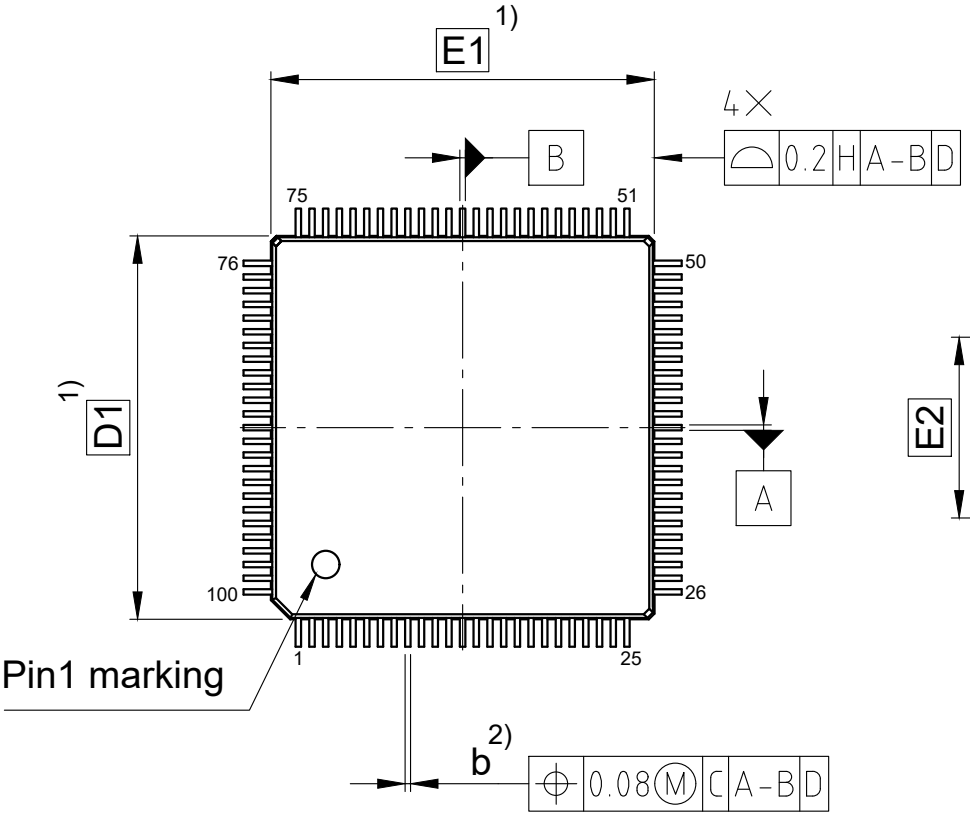

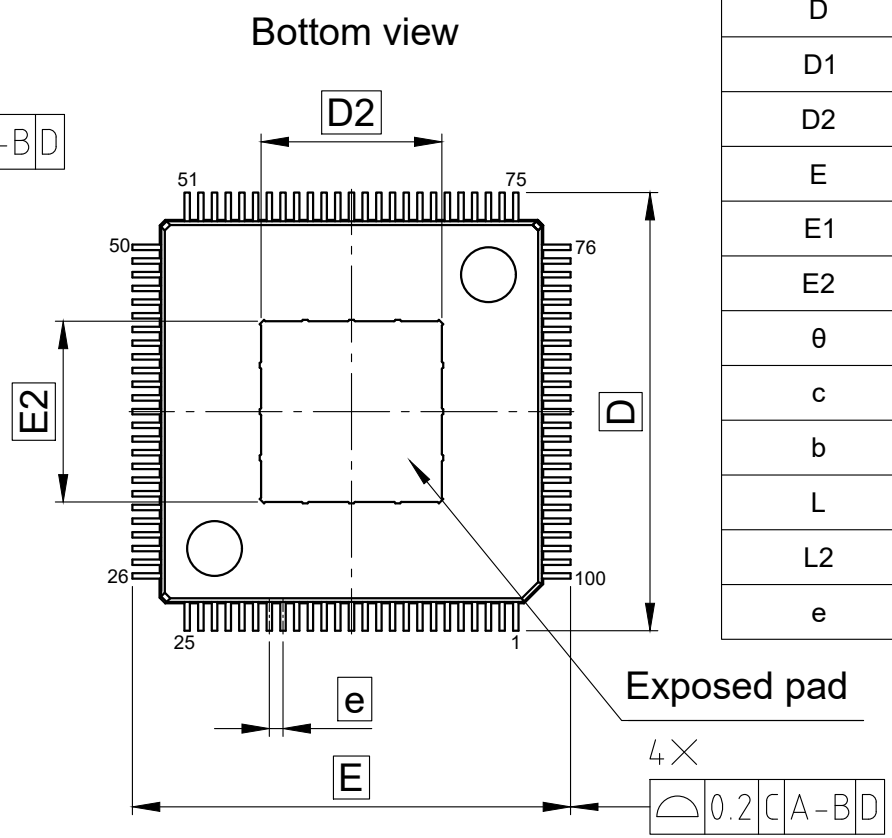

SYMBOL	DIMENSIONS		
	MIN.	NOM.	MAX.
A	-	-	1.6
A1	0.05	-	0.15
A2	1.35	1.4	1.45
D		16 BSC	
D1		14 BSC	
D2		6.5 REF	
E		16 BSC	
E1		14 BSC	
E2		6.5 REF	
θ	0°	-	8°
c	0.1	0.127	0.2
b	0.17	0.20	0.26
L	0.45	0.6	0.75
L2		0.25 REF	
e		0.5 BSC	

1) Dimensions D1 and E1 do not include mold protrusion. allowable protrusion is 0.25mm per side.
2) Dimension b does not include damber protrusion. the dambar protrusion(S) shall not cause the lead width to exceed b maximum by more than 0.08mm.
All dimensions are in units mm
The drawing is in compliance with ISO 128-30, Projection Method 1 []