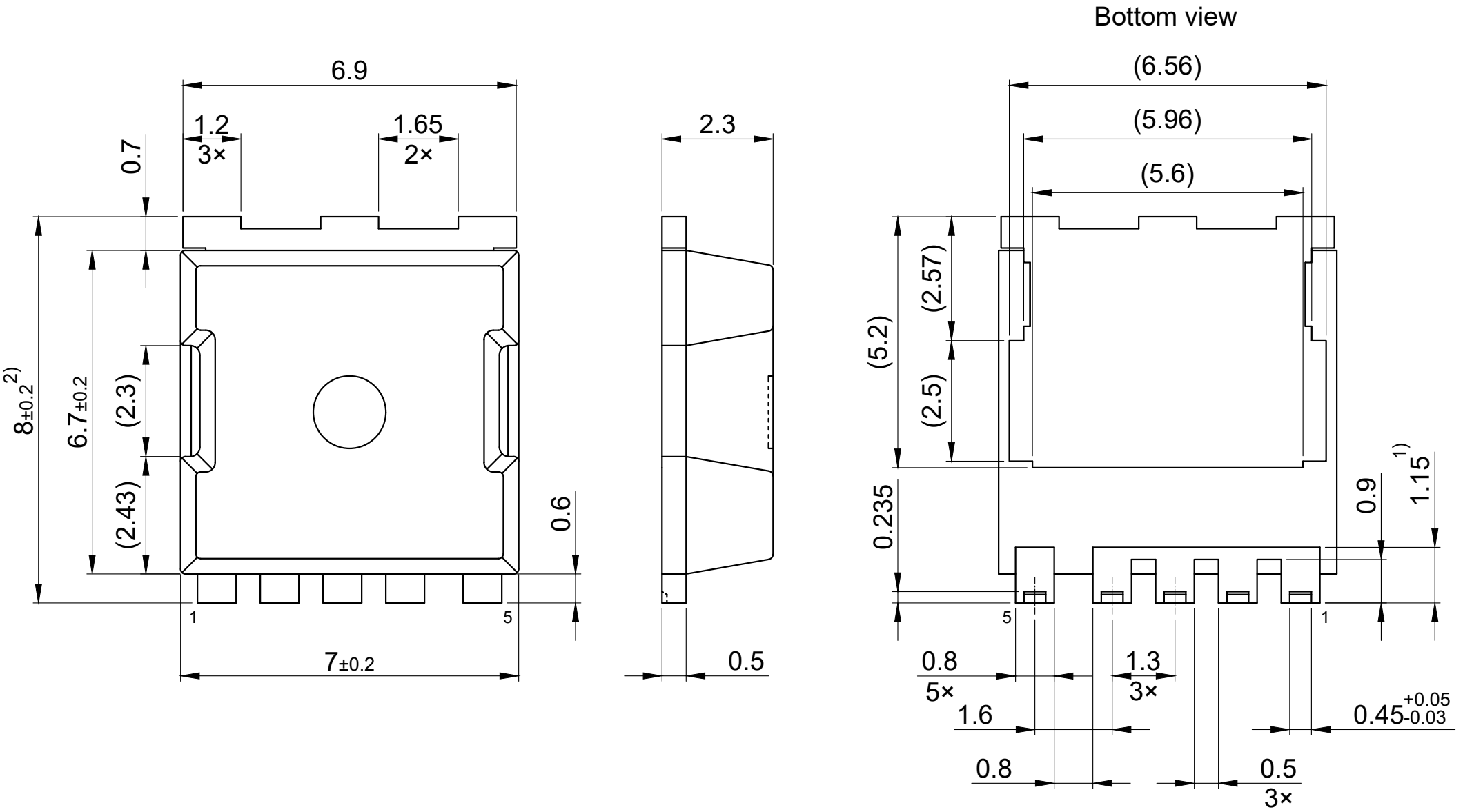

1) Lead length up to anti flash profile; mold flashes excluded.

2) Excluding burr.

All dimensions are in units mm

The drawing is in compliance with ISO 128-30, Projection Method 1 [ ]

Drawing according to ISO 8015, general tolerances ±0.1;±1°30'