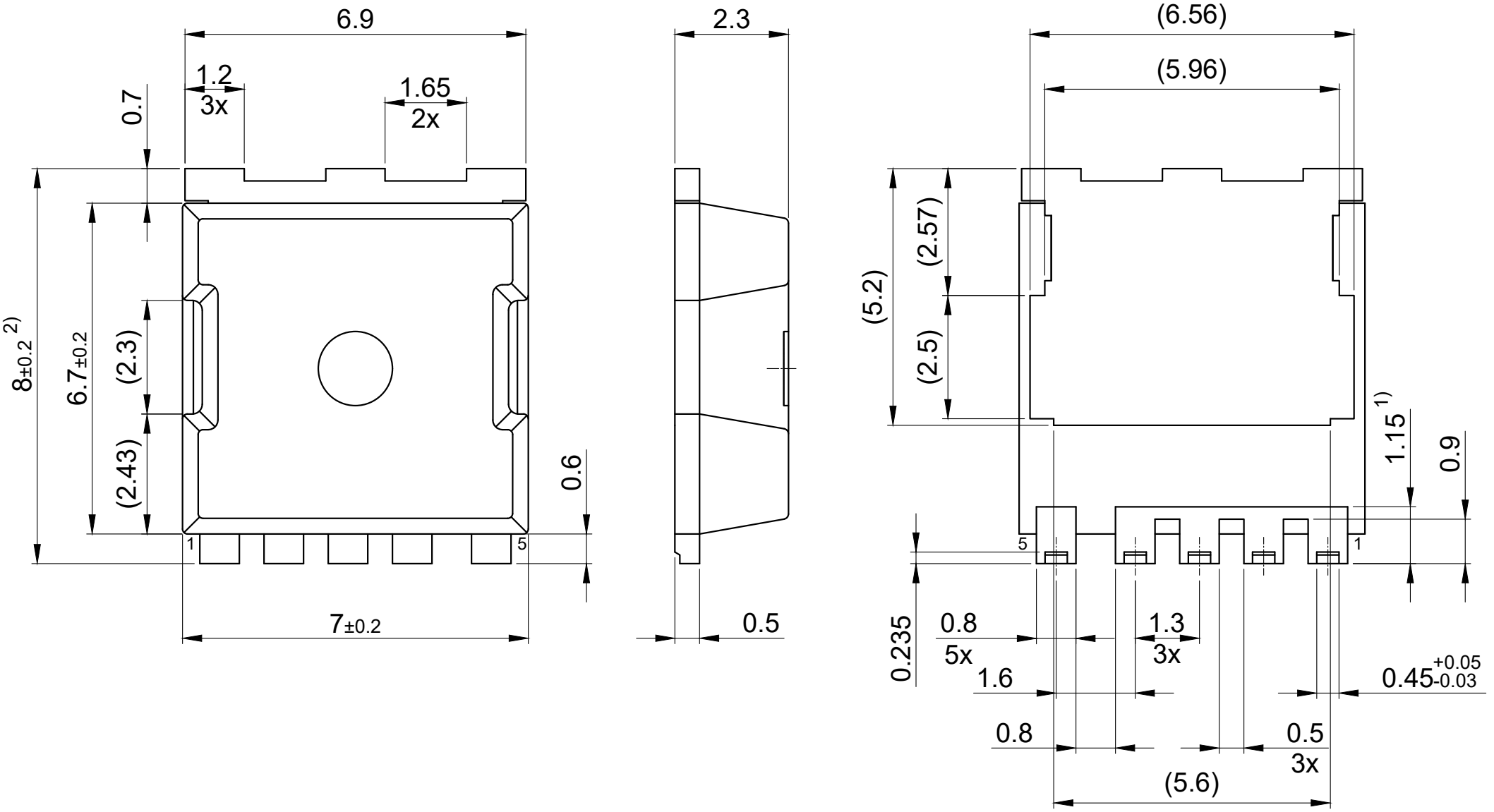

1) Lead length up to anti flash profile; mold flashes excluded

2) Excluding burr

All dimensions are in units mm

The drawing is in compliance with ISO 128-30, Projection Method 1 [ ]