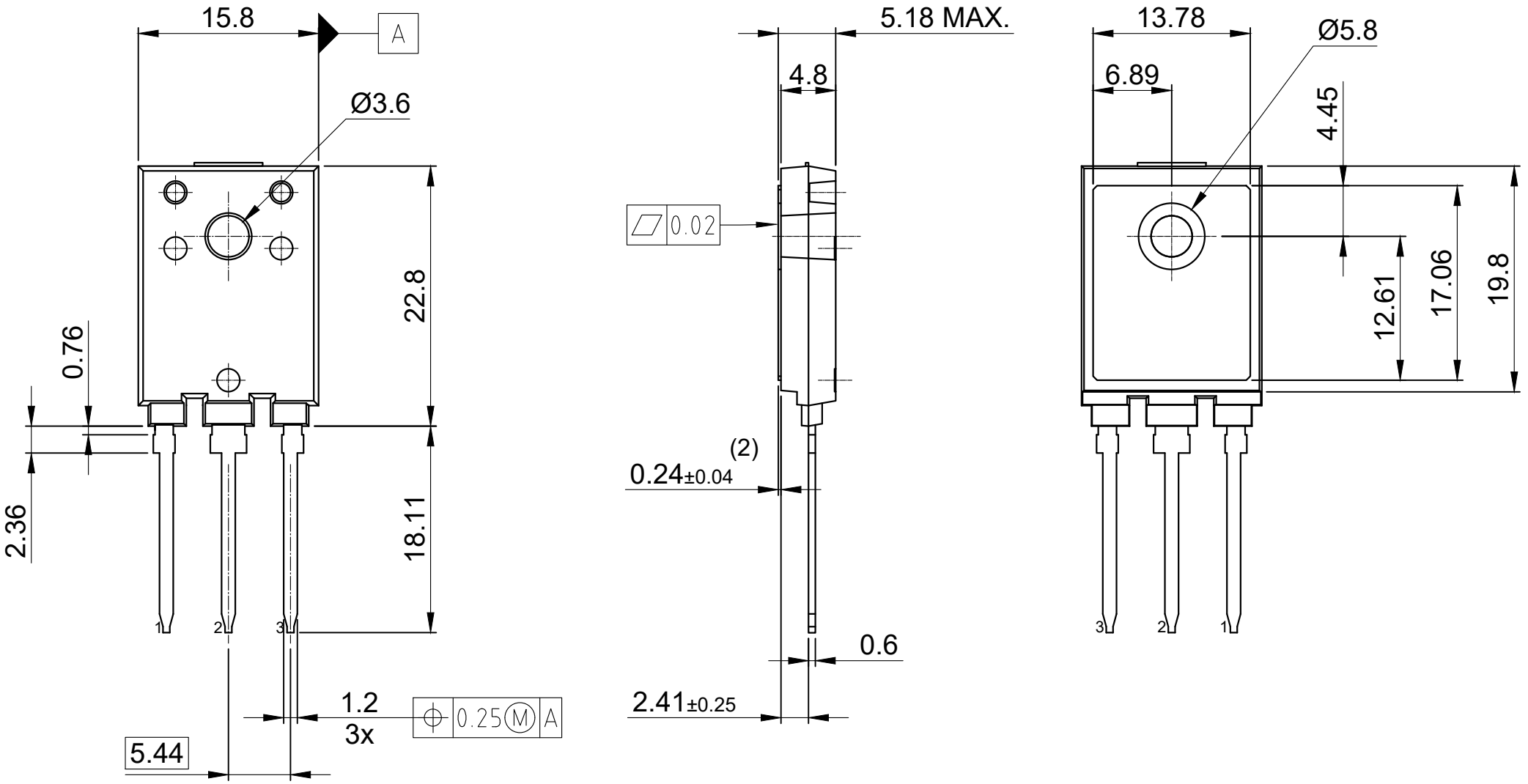

1) All metal surfaces tin plated except area of cut

2) Above isolation layer dimensions is under non-force applied condition

All dimensions are in units mm

The drawing is in compliance with ISO 128-30, Projection Method 1 [ ]