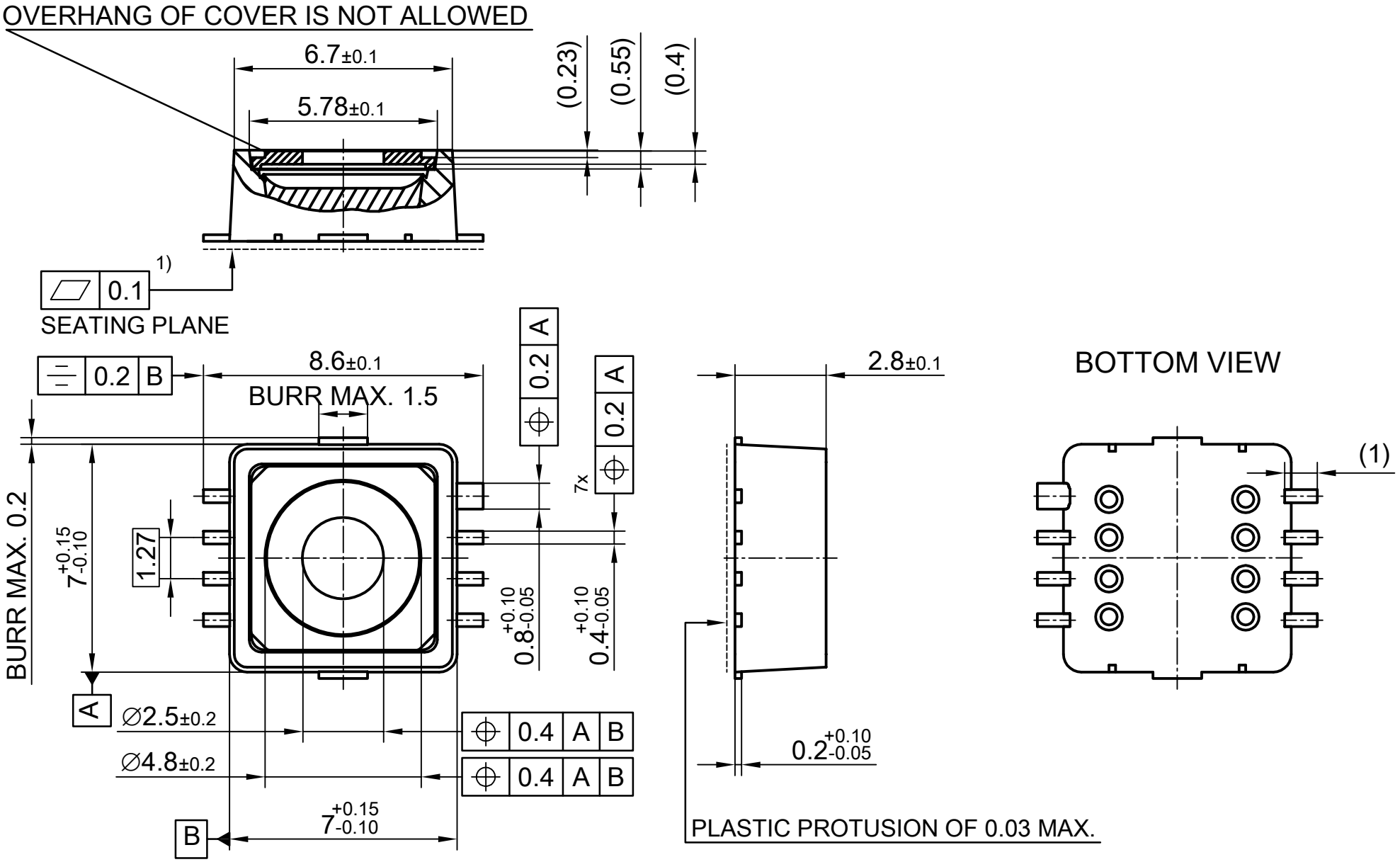

OUTER DIMENSION DOES NOT INCLUDE PROTUSION OR INTRUSION OF 0.2 MAX. PER SIDE
1) VALID FOR THE WHOLE SEATING PLANE INCLUDED TIEBAR AREA
ALL DIMENSIONS ARE IN UNITS MM
THE DRAWING IS IN COMPLIANCE WITH ISO 128 & PROJECTION METHOD 1 [ ]