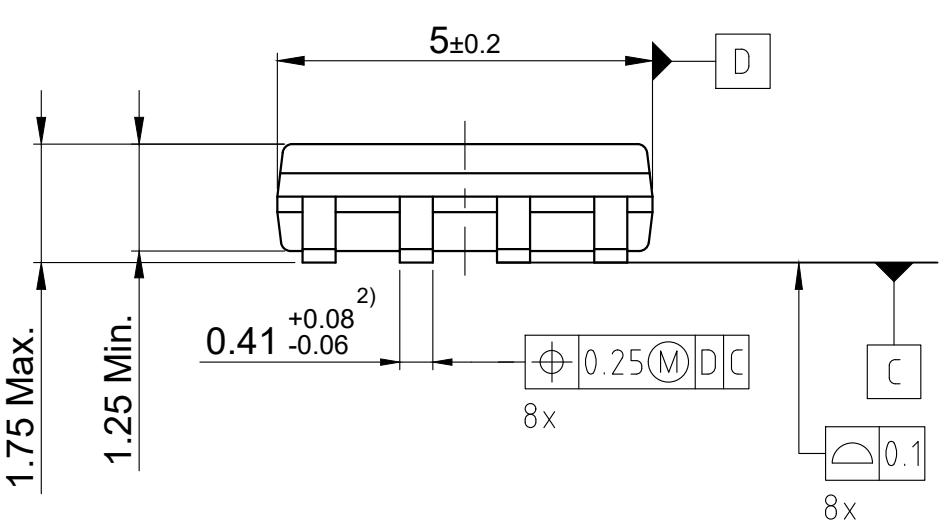

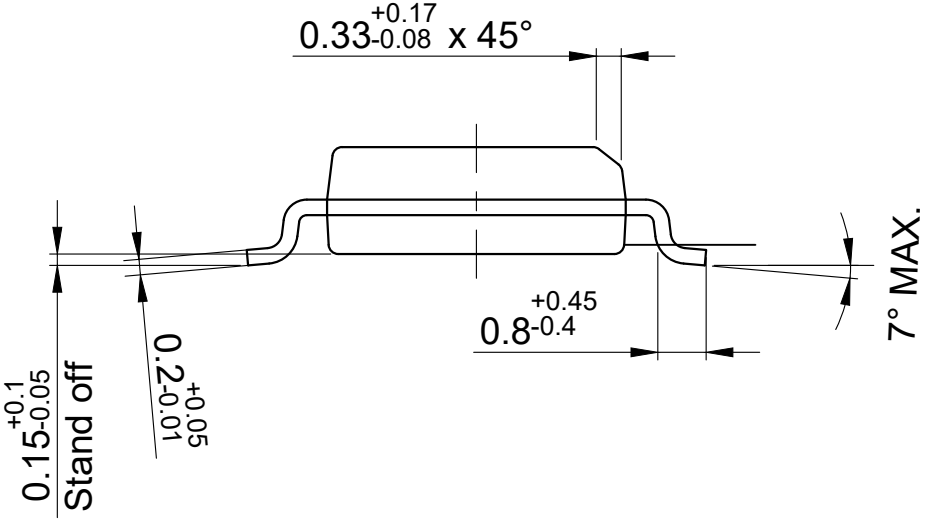

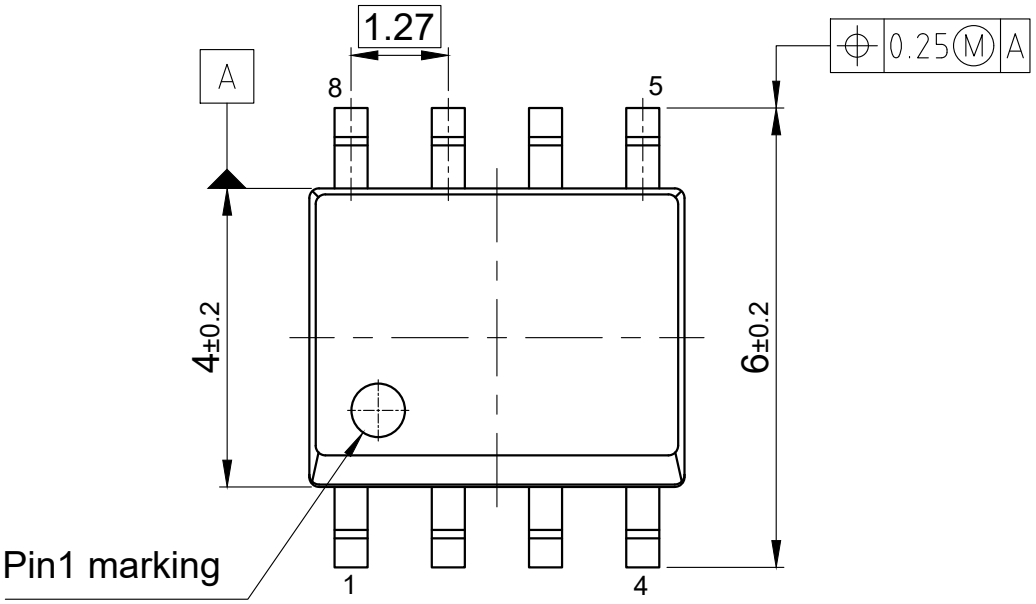

1) Does not include plastic or metal protrusion
2) Does not include dambar protrusion of 0.127 Max. in excess of the lead width dimension
All dimensions are in units mm
The drawing is in compliance with ISO 128-30, Projection Method 1 [ ]
Drawing according to ISO 8015 general tolerances ISO 2768-mk