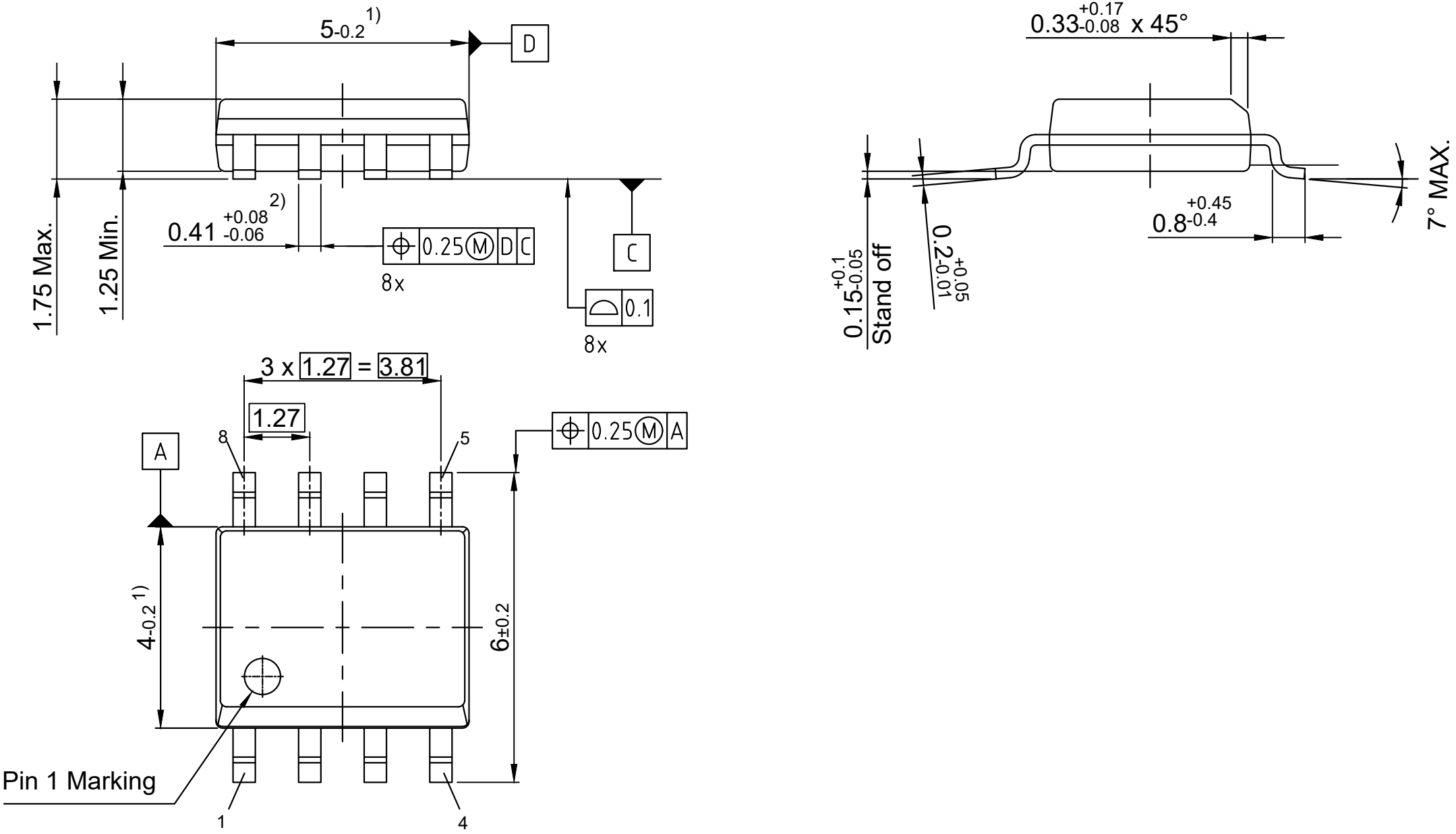

1) Does not include plastic or metal protrusion

2) Does not include dambar protrusion of 0.127 Max. in excess of the lead width dimension

All dimensions are in units mm

The drawing is in compliance with ISO 128-30, Projection Method 1 [ ]