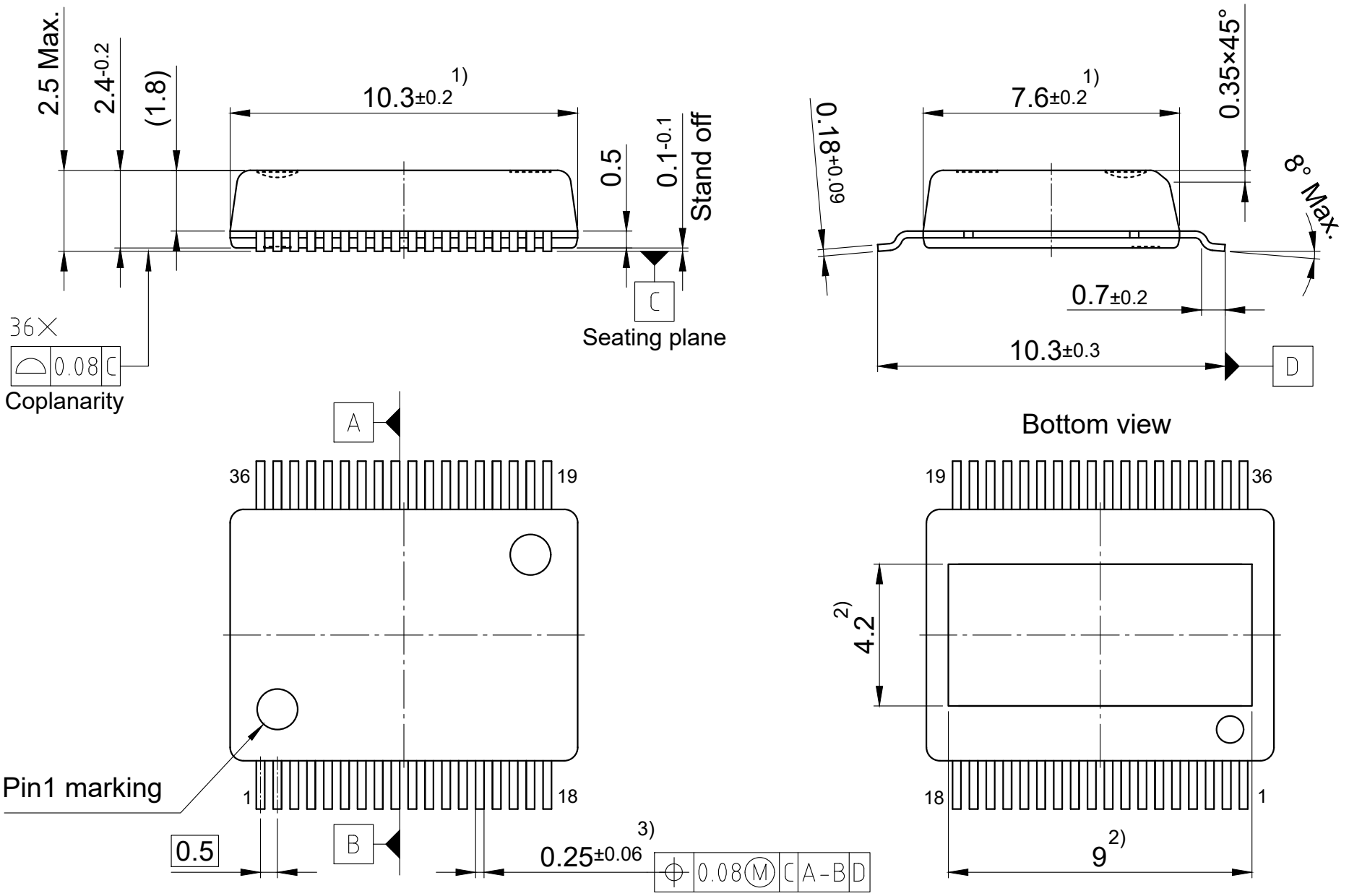

1) Does not include plastic or metal protrusion of 0.15 max. per side
2) Exposed diepad, excluding moldflash allowance of 0.3mm max. per side.
3) Does not include dambar protrusion of 0.05 max. per side.
All dimensions are in units mm
The drawing is in compliance with ISO 128-30, Projection Method 1 [ ]
Drawing according to ISO 8015, general tolerances ISO-2768-mK