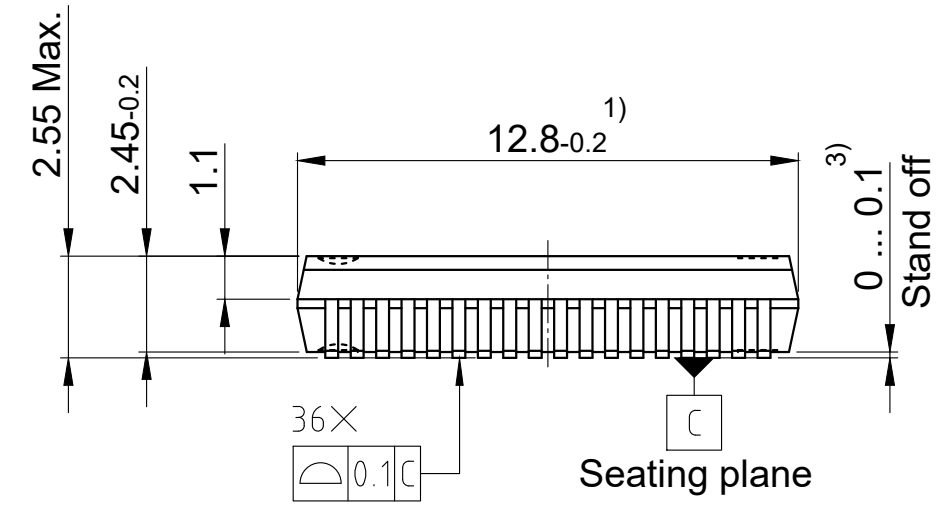

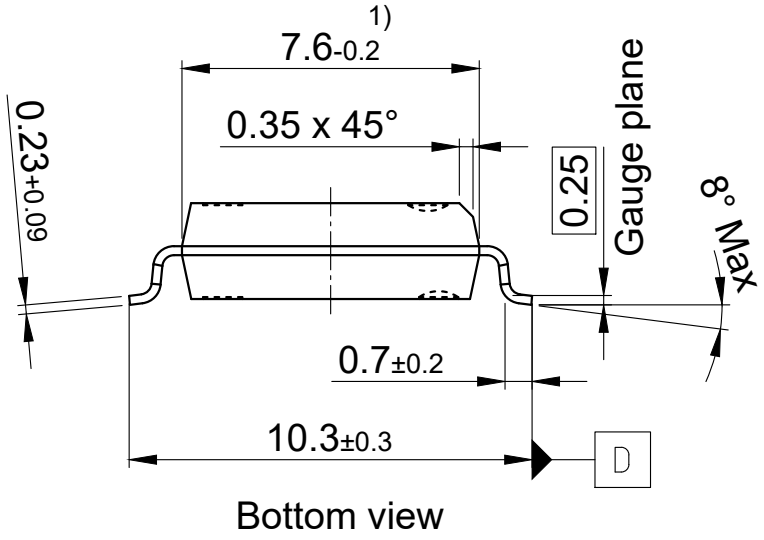

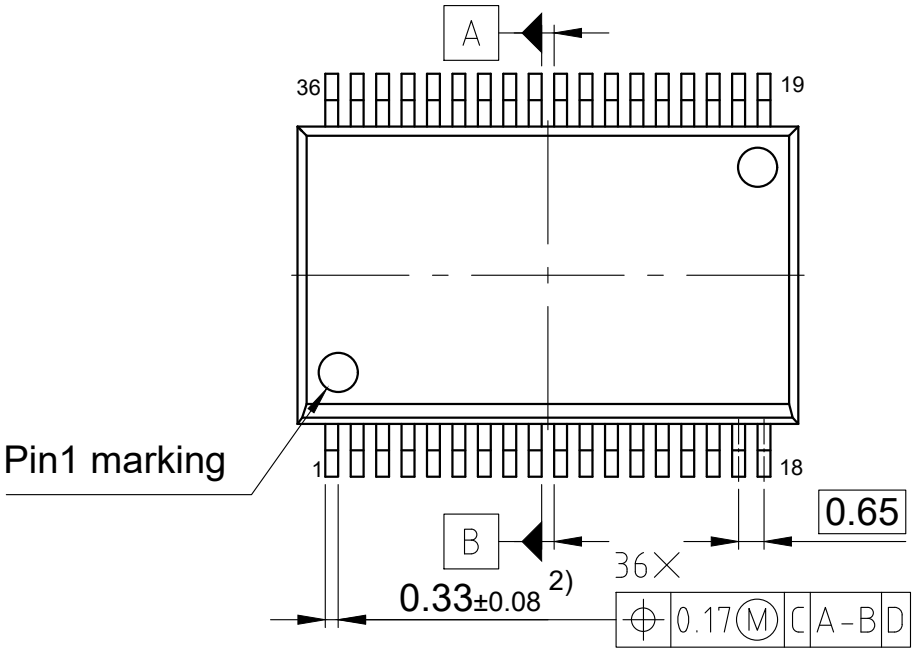

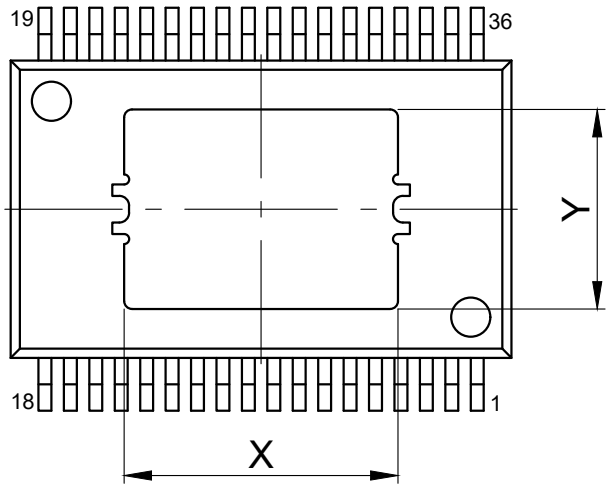

EPAD Dimension	
X	Y
5.2	4.6
7.0	5.1

1) Does not include plastic or metal protrusion of 0.15 max. per side
2) Does not include dambar protrusion of 0.05 max. per side
3) Distance from leads bottom (=seating plane) to exposed die pad
4) Excluding the mold flash allowance of 0.3mm max.per side
All dimensions are in units mm
The drawing is in compliance with ISO 128-30, Projection Method 1 [ ]
Drawing according to ISO 8015, general tolerances ISO 2768-mK