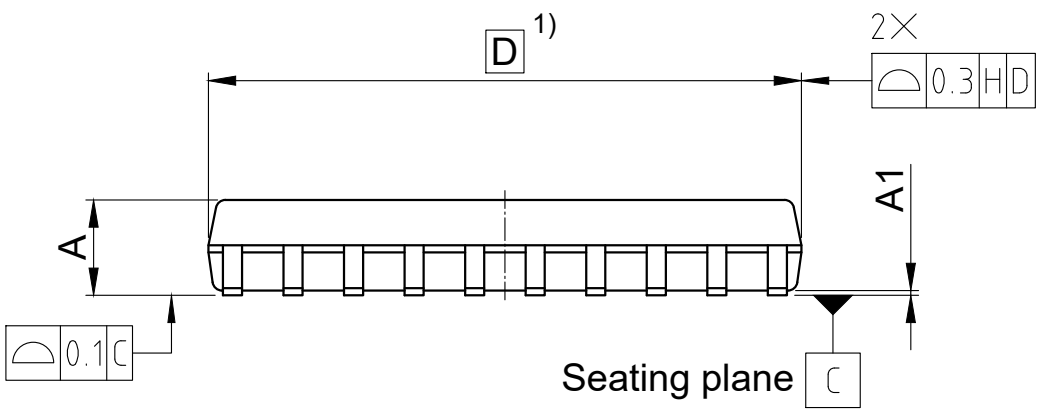

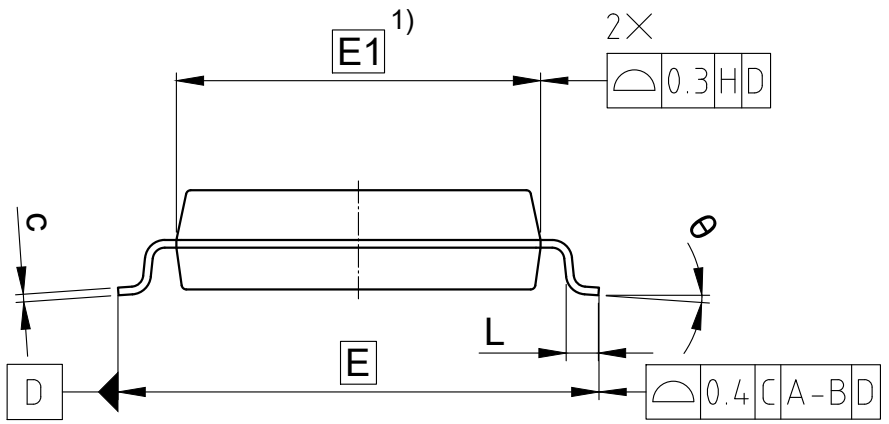

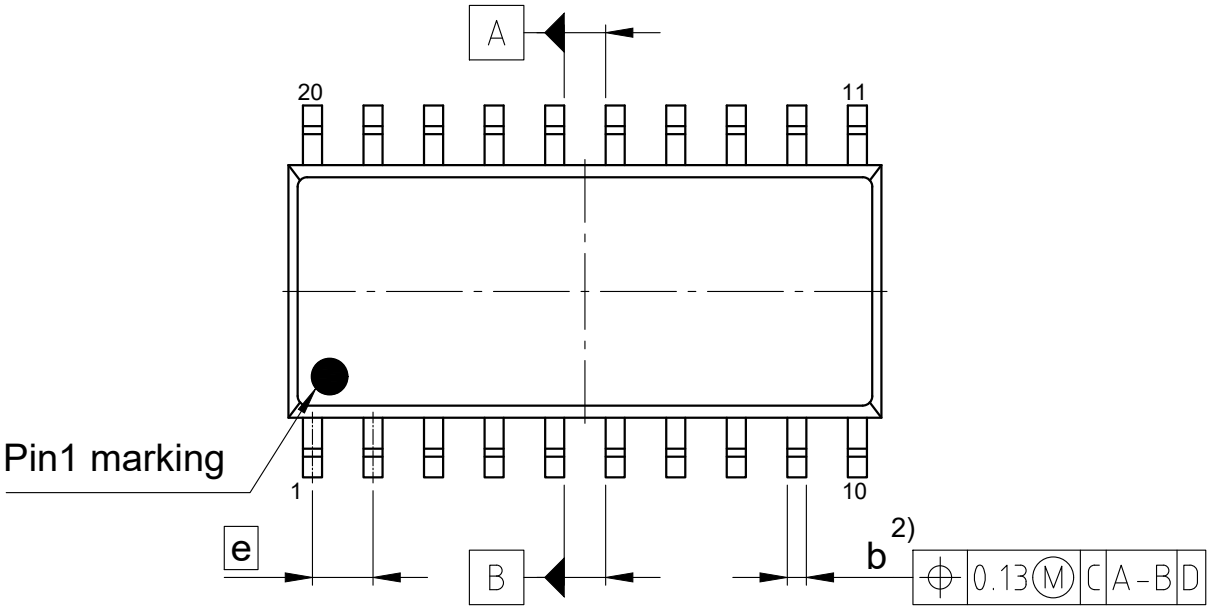

SYMBOL	DIMENSIONS		
	MIN.	NOM.	MAX.
A	-	-	2.25
A1	0.05	-	0.2
D	12.7 BSC		
E	7.8 BSC		
E1	5.3 BSC		
θ	0°	-	8°
c	0.13	-	0.2
b	0.39	0.47	0.55
L	0.45	0.6	0.75
e	1.27 BSC		

1)Dimensioning D include mold flash, dimensioning E1 does not include interlead flash or protrusion. interlead flash or protrusions shall not exceed 0.025 mm per side.
2)Dimension "b" does not include the dambar protrusion. allowable dambar protrusion shall be 0.10mm
All dimensions are in units mm
The drawing is in compliance with ISO 128-30, Projection Method 1 [ ]
Dimensioning and tolerancing per ASME Y14.5M-1994.