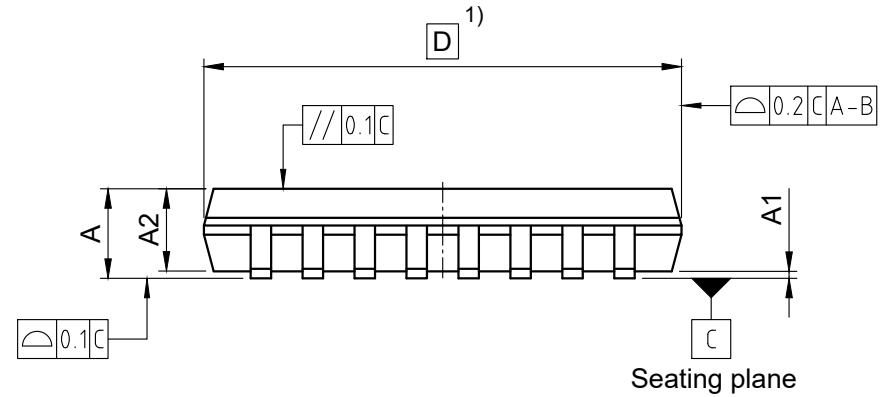

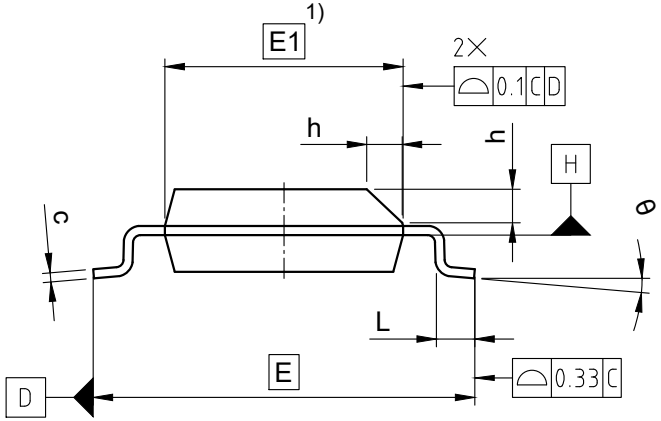

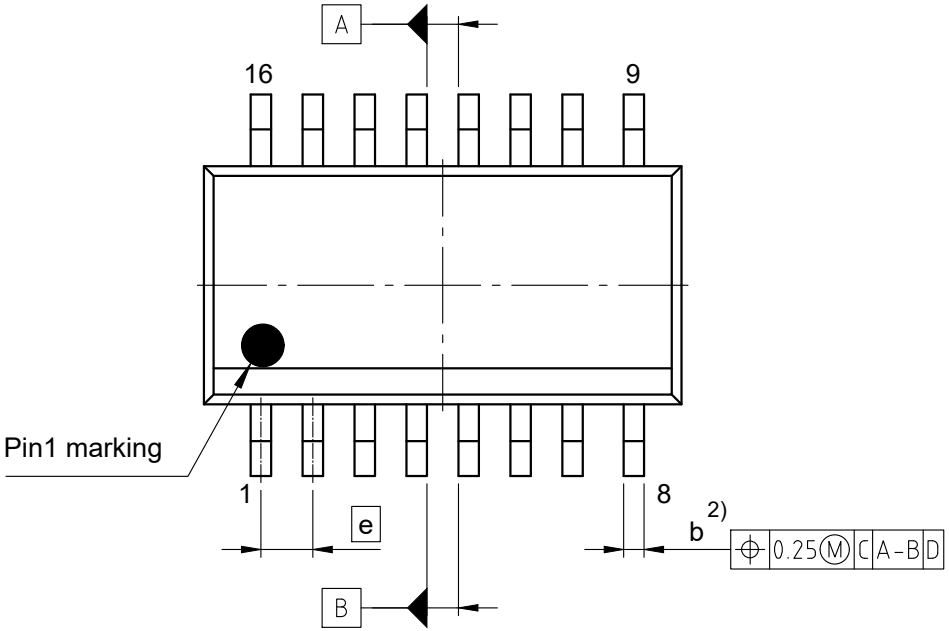

SYMBOL	DIMENSIONS		
	MIN.	NOM.	MAX.
A	2.35	-	2.65
A1	0.1	-	0.3
A2	2.05	-	2.55
b	0.31	-	0.51
c	0.2	-	0.33
D	10.3 BSC		
E	10.3 BSC		
E1	7.5 BSC		
e	1.27 BSC		
L	0.4	-	1.27
h	0.25	-	0.75
θ	0°	-	8°

1) Dimension D does not include mold flash, protrusions or gate burrs.mold flash, protrusions or gate burrs shall not exceed 0.15 mm per end.

2) Dimension "b" does not include dambar protrusion. allowable dambar protrusion shall be 0.10 mm

All dimensions are in units mm

The drawing is in compliance with ISO 128-30, Projection Method 1 [ ]

Dimensioning and tolerancing per ASME Y14.5M - 1994.