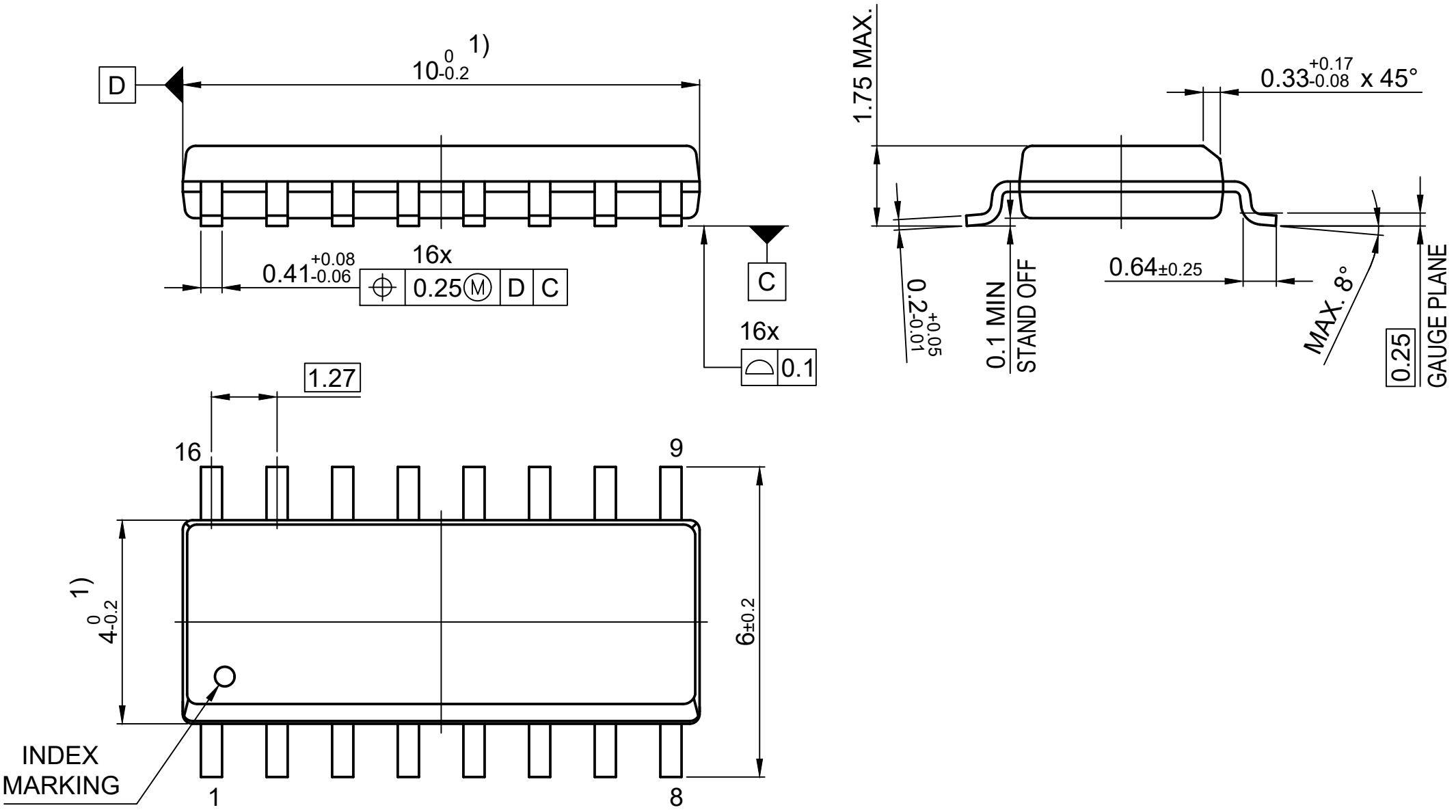

All dimensions are in units mm

The drawing is in compliance with ISO 128-30, Projection Method 1 [ ]

1) Does not include plastic or metal protrusion of 0.25 mm Max. per side