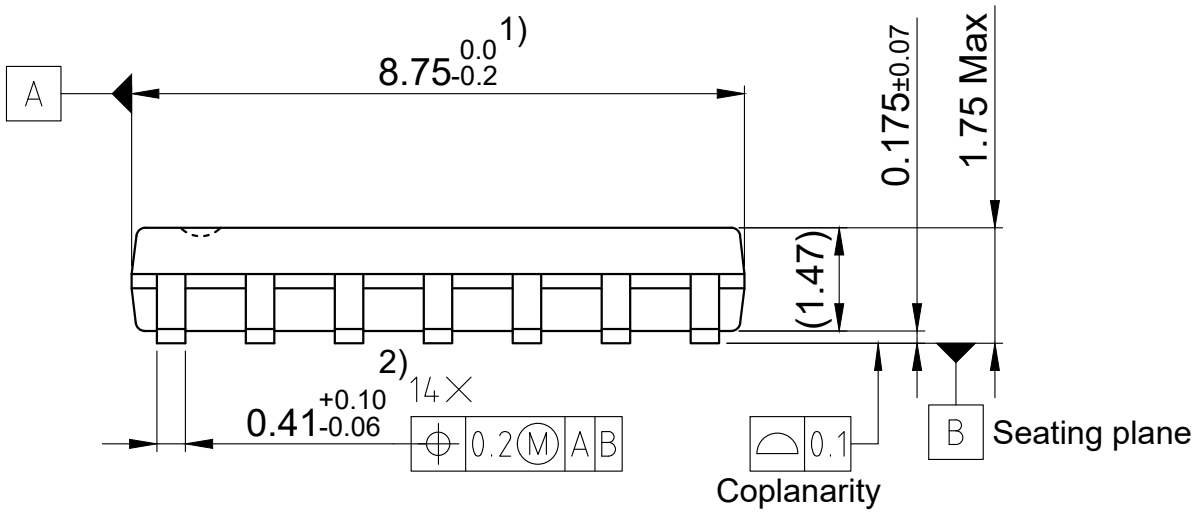

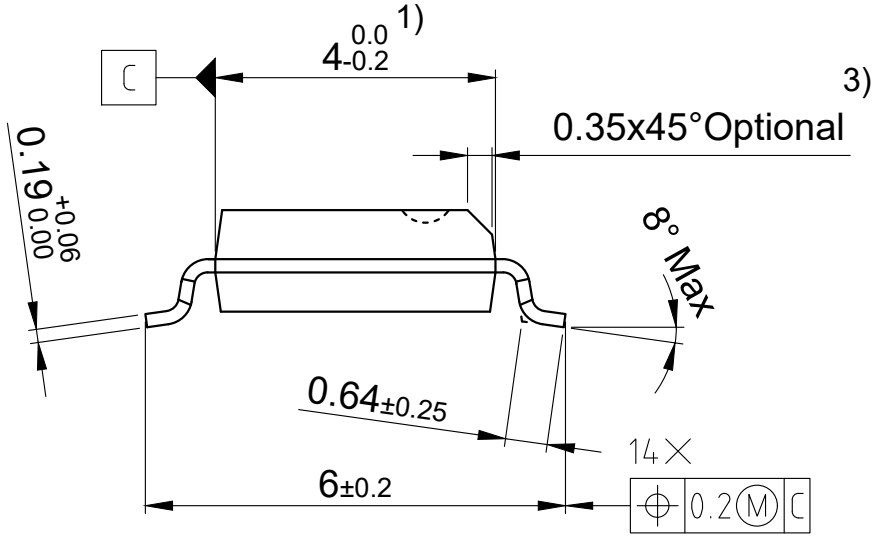

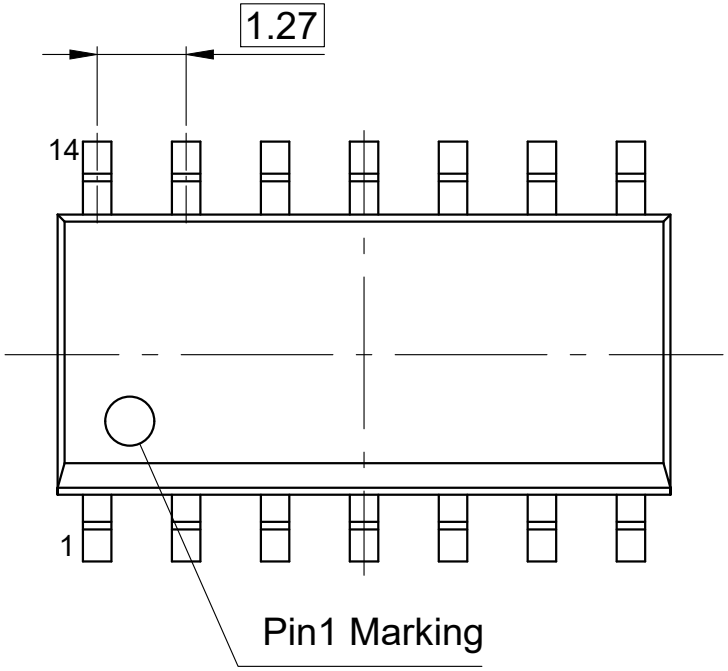

1) Does not include plastic or metal protrusion of 0.15 max. per side
2) Lead width can be 0.61max in dambar area
3) The chamfer feature is optional,in addition to pin 1 index marking
All dimensions are in units mm
The drawing is in compliance with ISO 128-30, Projection Method 1 [ ]
Drawing according to ISO 8015 general tolerances ±0.05; ±30°