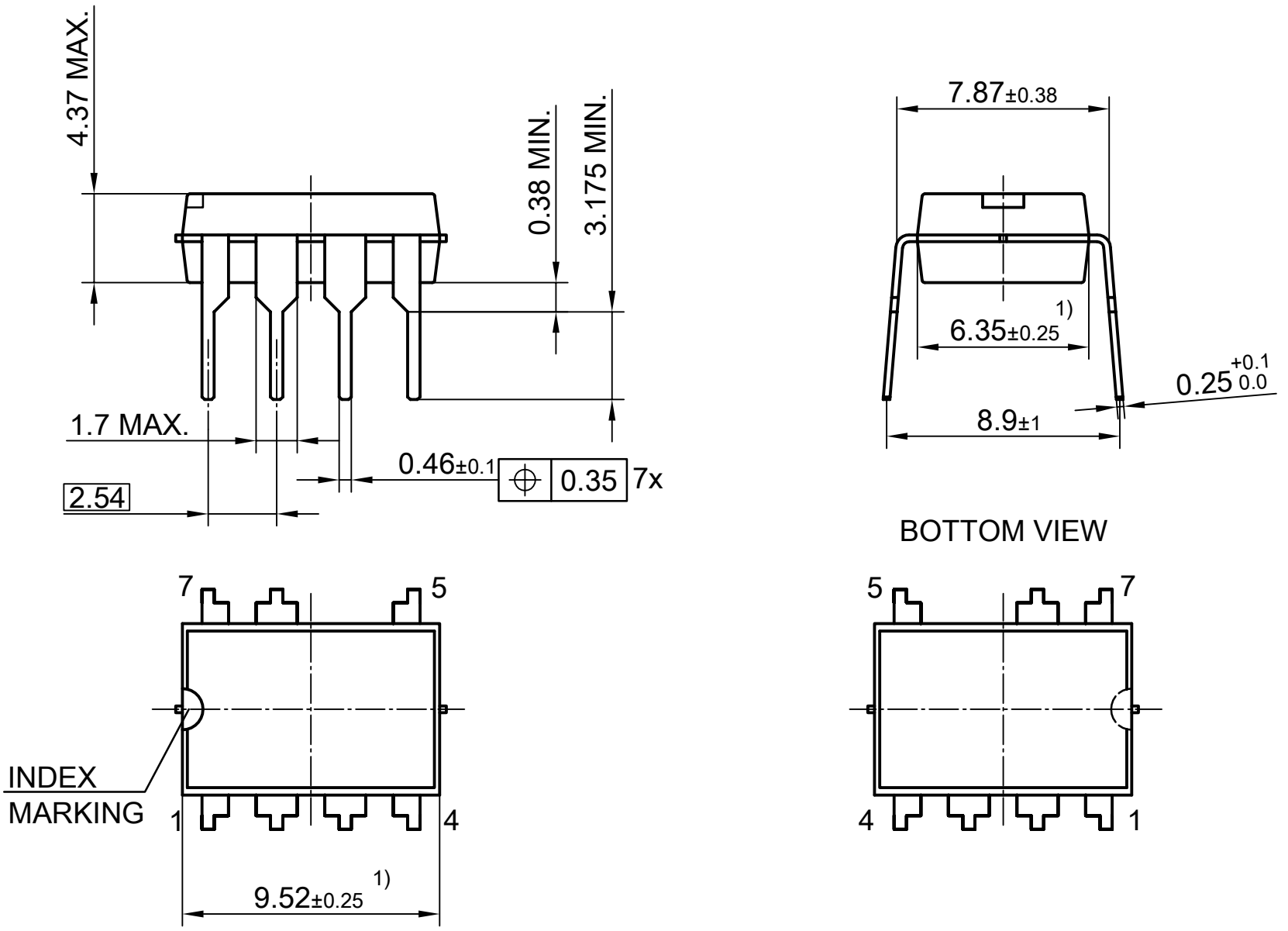

1) DOES NOT INCLUDE PLASTIC OR METAL PROTRUSION OF 0.25 MAX. PER SIDE
ALL DIMENSIONS ARE IN UNITS MM
THE DRAWING IS IN COMPLIANCE WITH ISO 128 & PROJECTION METHOD 1 [ ]