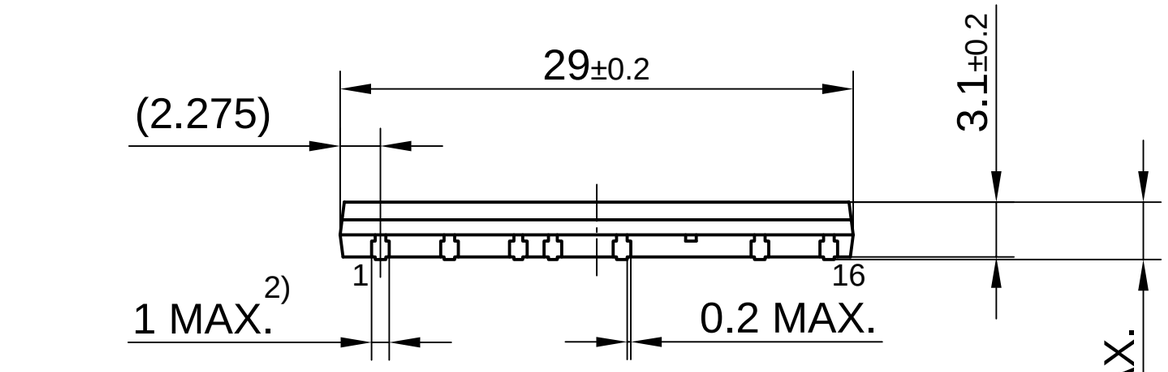

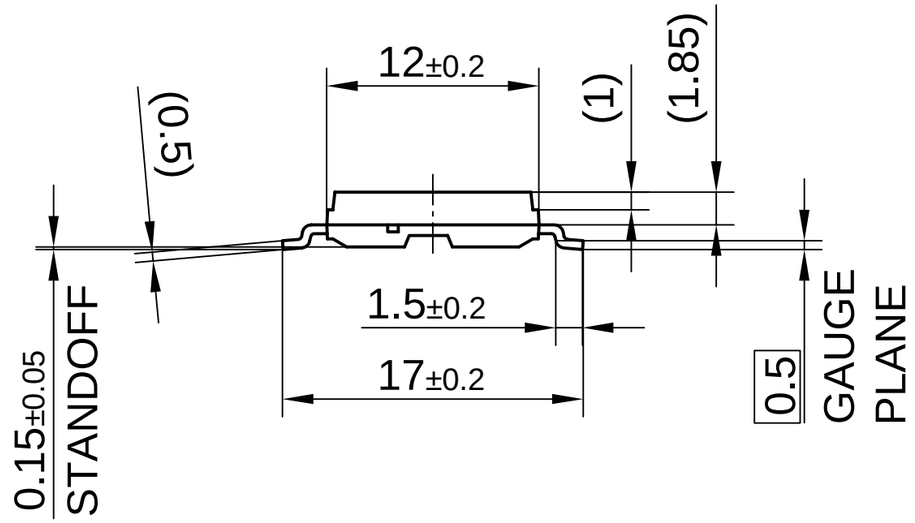

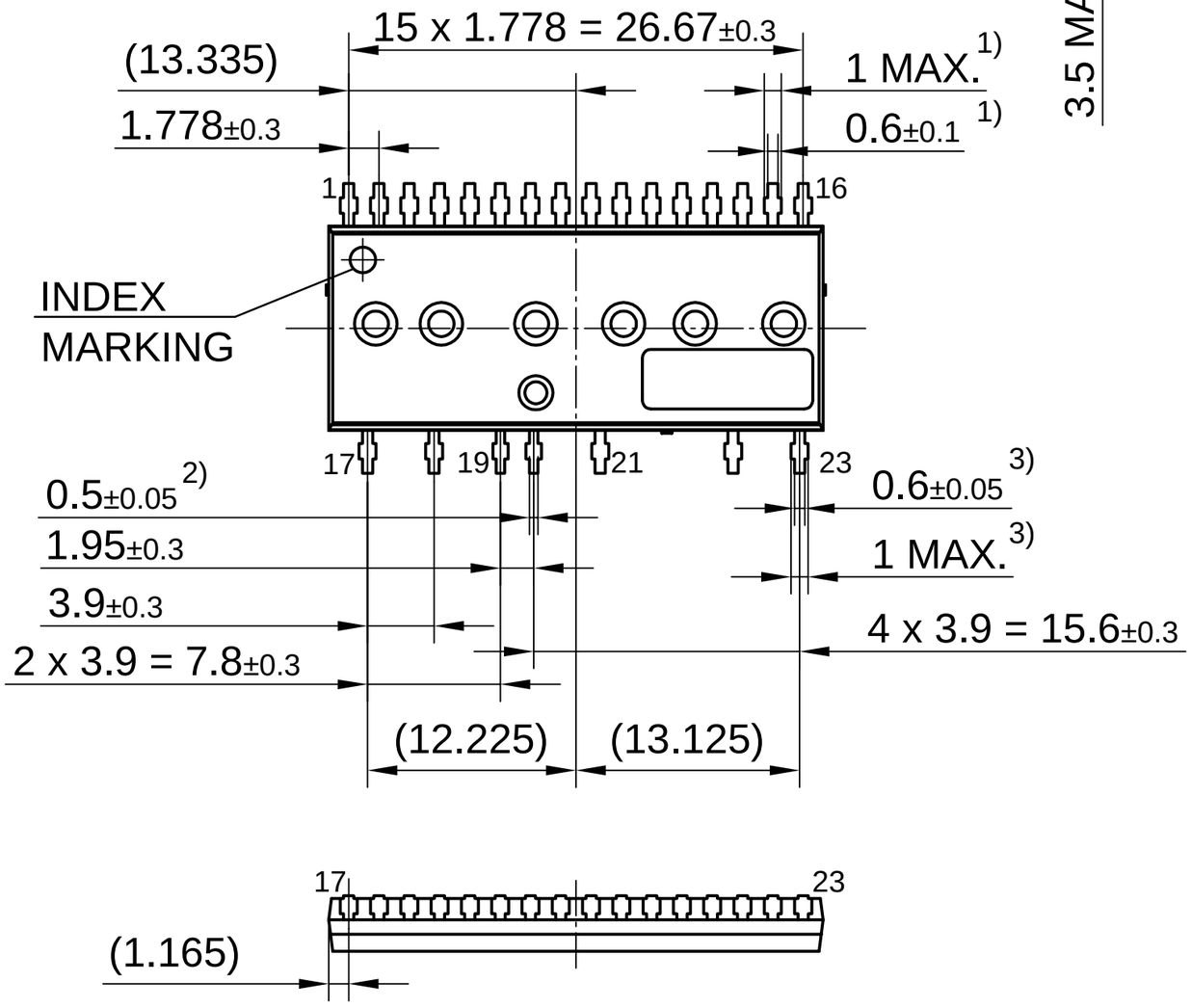

1) APPLICABLE TO LEAD NO. 1 TO 16
2) APPLICABLE TO LEAD NO. 19 AND 20
3) APPLICABLE TO LEAD NO. 17, 18, 21, 22 AND 23
ALL DIMENSIONS ARE IN UNITS MM
THE DRAWING IS IN COMPLIANCE WITH ISO 128 & PROJECTION METHOD 1 [ ]