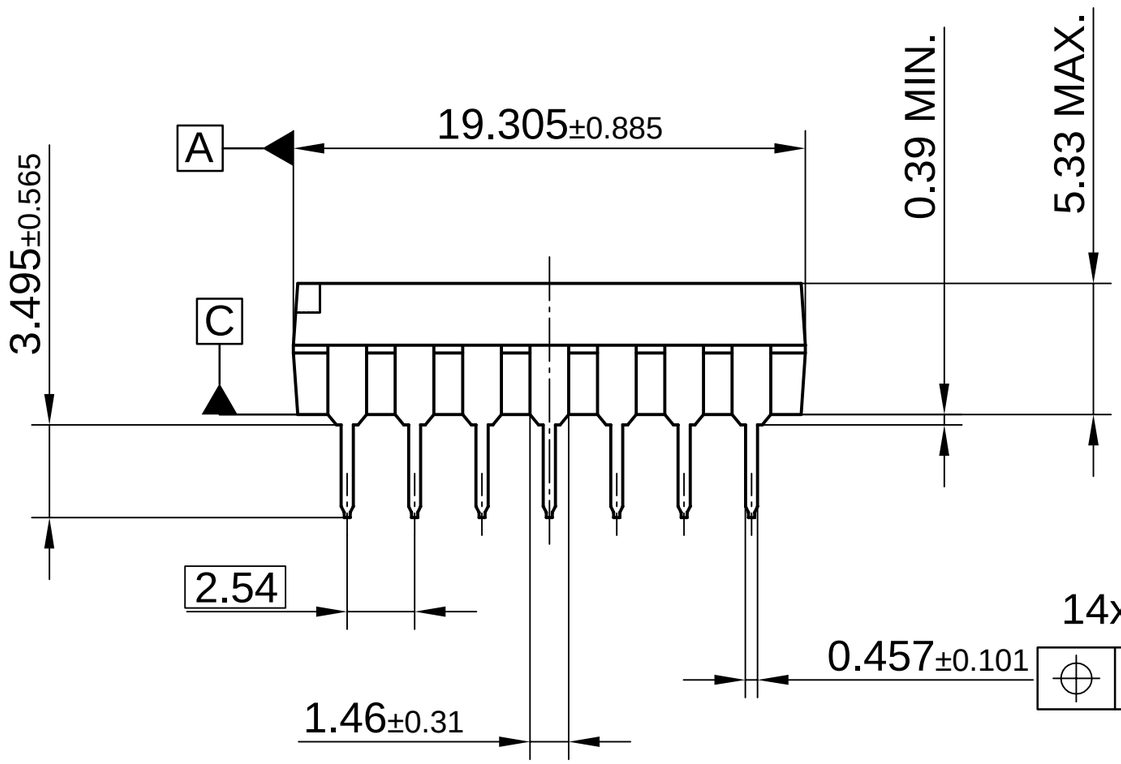

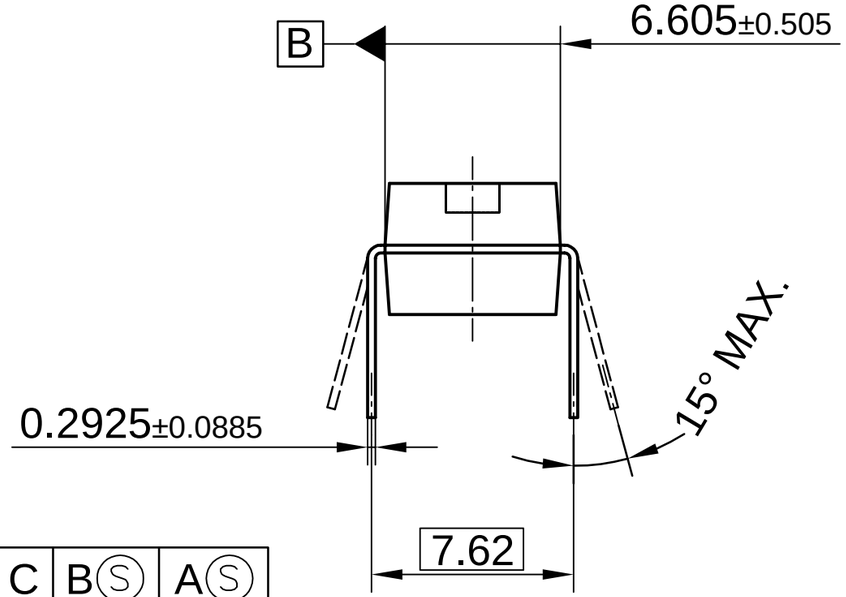

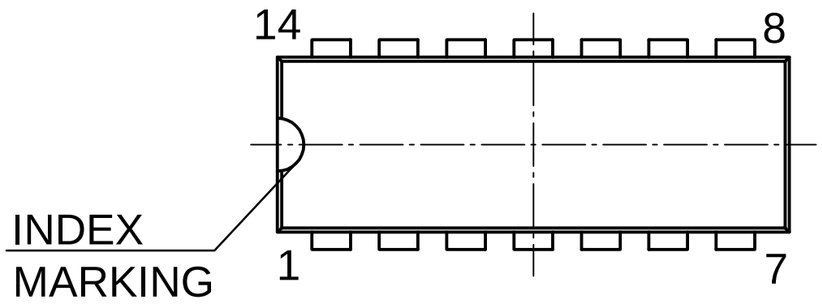

BOTTOM VIEW

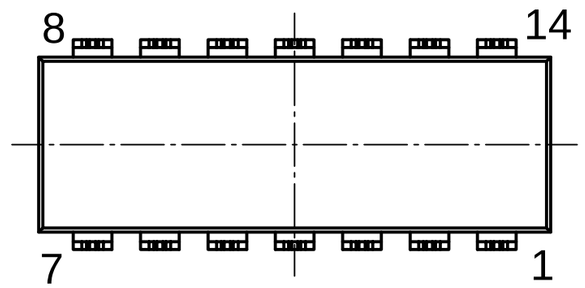

1) DIMENSION DOES NOT INCLUDE MOLD PROTRUSIONS, MOLD PROTRUSIONS SHALL NOT EXCEED 0.25
ALL DIMENSIONS ARE IN UNITS MM
THE DRAWING IS IN COMPLIANCE WITH ISO 128 & PROJECTION METHOD 1 [ ]