REV.	DESCRIPTION	ECN	DATE
D	CHANGE PER ECN	1120_09981	6–12–24

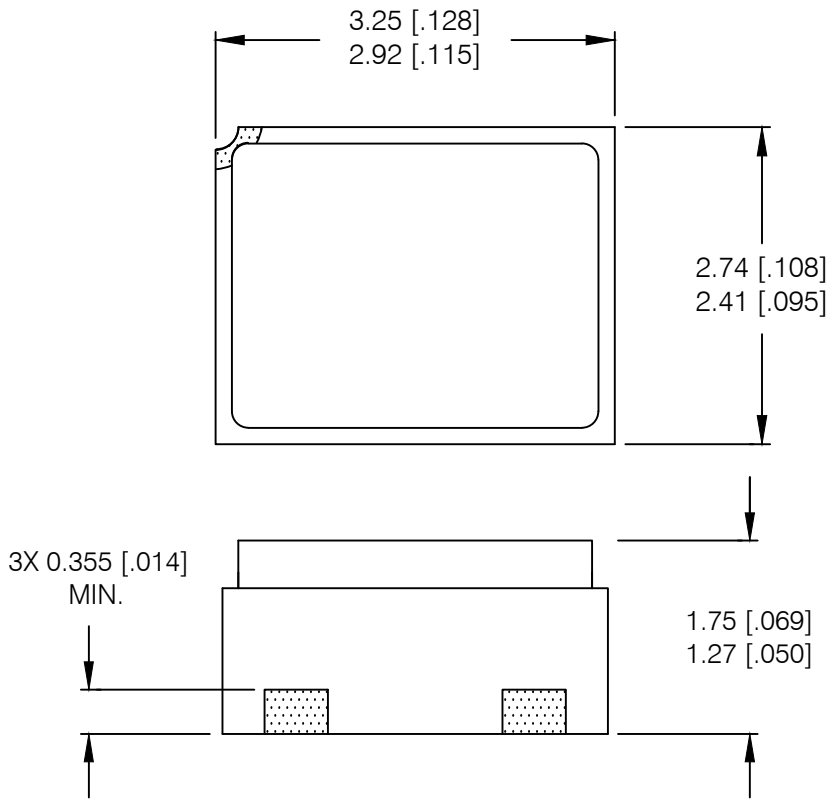

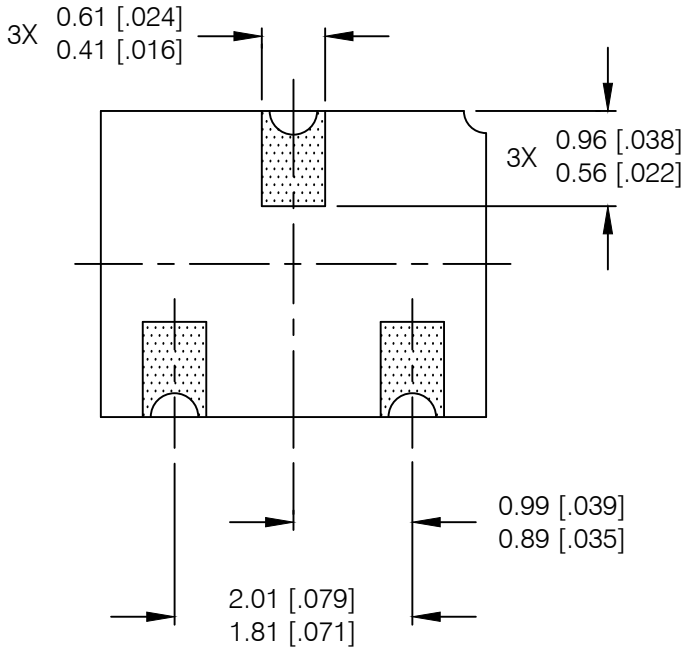

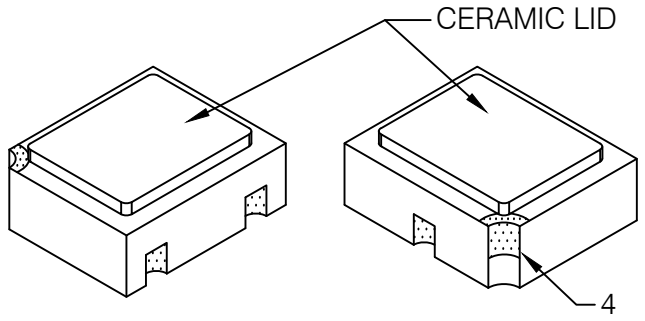

NOTES:

1. DIMENSIONING & TOLERANCING PER ASME Y14.5M-1994
2. CONTROLLING DIMENSION: INCH.
3. DIMENSIONS ARE SHOWN IN MILLIMETERS [INCHES].
4. HATCHED AREAS ON PACKAGE DENOTE METALIZATION AREAS.
5. STANDARD FINAL FINISH ON ALL TERMINALS IS SOLDER ALLOY 63%Sn 37%Pb.
6. METALIZATION MAY BE VISIBLE AROUND LID

IOR HiRel
An Infineon Technologies Company

TITLE: UB PACKAGE OUTLINE WITH CERAMIC LID

DRAWING NO. D100872G–WEB

REV D