REV.	DESCRIPTION	ECN	DATE
C	CHANGE PER ECN	1120_10134	3-5-25

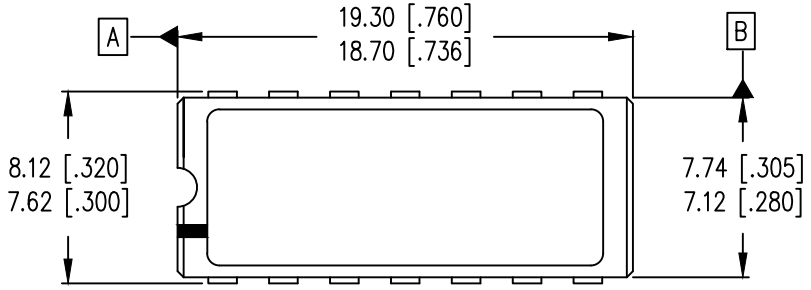

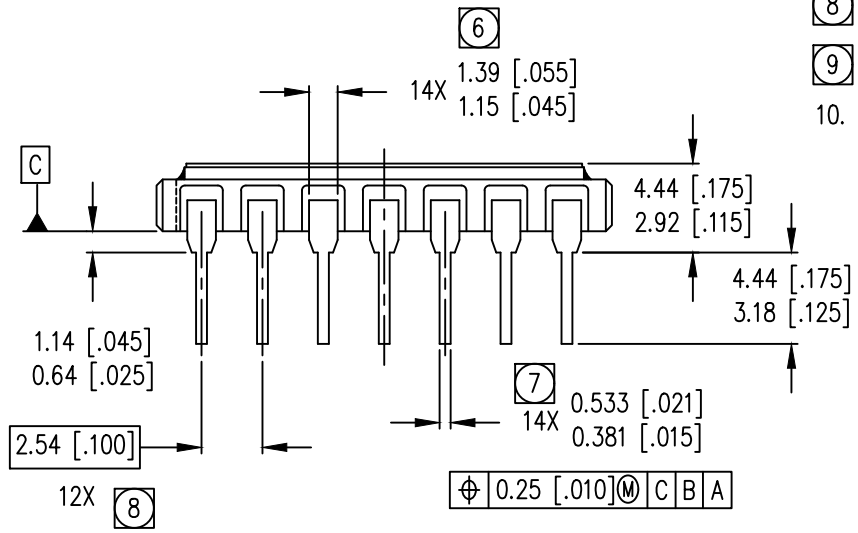

NOTES:

1. DIMENSIONING & TOLERANCING PER ASME Y14.5M-1994.
2. CONTROLLING DIMENSION: INCH.
3. DIMENSIONS ARE SHOWN IN MILLIMETERS [INCHES].
4. OUTLINE CONFORMS TO JEDEC OUTLINE MO-036AB.
5. MEASURED WITH THE LEADS CONSTRAINED TO BE PERPENDICULAR TO DATUM PLANE C.
6. MEASURE THIS DIMENSION 2 TIMES PER SIDE.
7. MEASURE THIS DIMENSION 2 TIMES PER SIDE.
8. MEASURE THIS DIMENSION 2 TIMES PER SIDE.
9. MEASURE THIS DIMENSION 1 TIME PER SIDE.
10. STANDARD FINAL FINISH ON ALL TERMINALS IS SOLDER ALLOY 63%Sn 37%Pb.

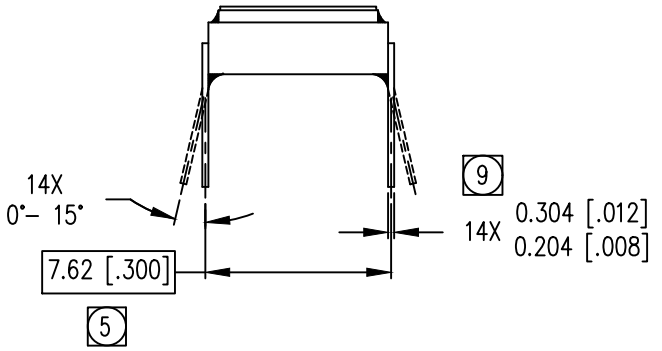

IOR HiRel
An Infineon Technologies Company

TITLE: MO-036AB FET PACKAGE OUTLINE	
DRAWING NO. D100779G-WEB	REV C