REV.	DESCRIPTION	ECN	DATE
C	INITIAL RELEASE	1120_ER6904	4–3–20

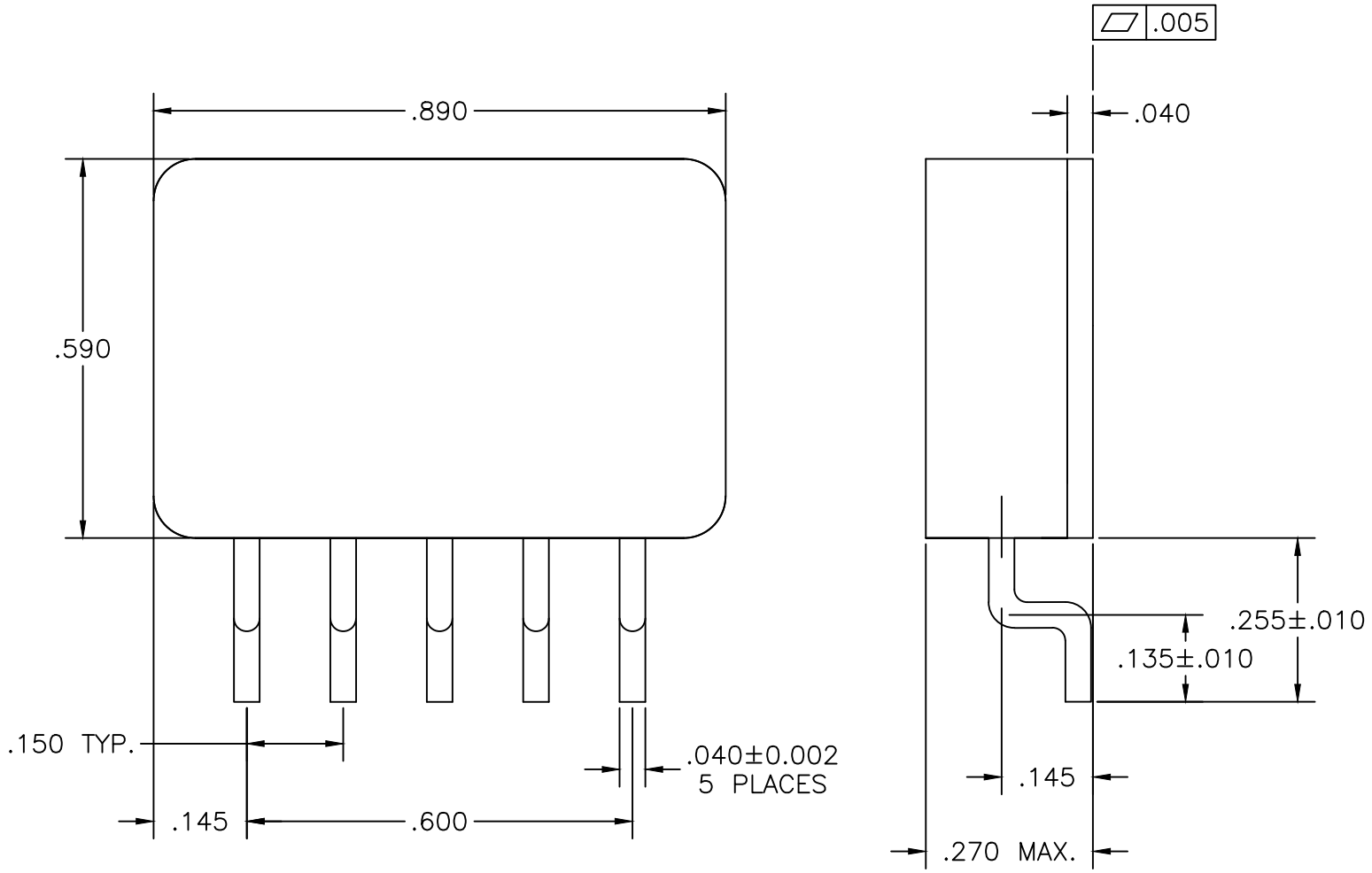

IOR HiRel
An Infineon Technologies Company

NOTES:
1. STANDARD FINAL FINISH ON ALL TERMINALS IS SOLDER ALLOY 63%Sn 37%Pb.

TITLE:
CASE OUTLINE: 5 PIN SM

DRAWING NO.
D100736G–WEB

REV C