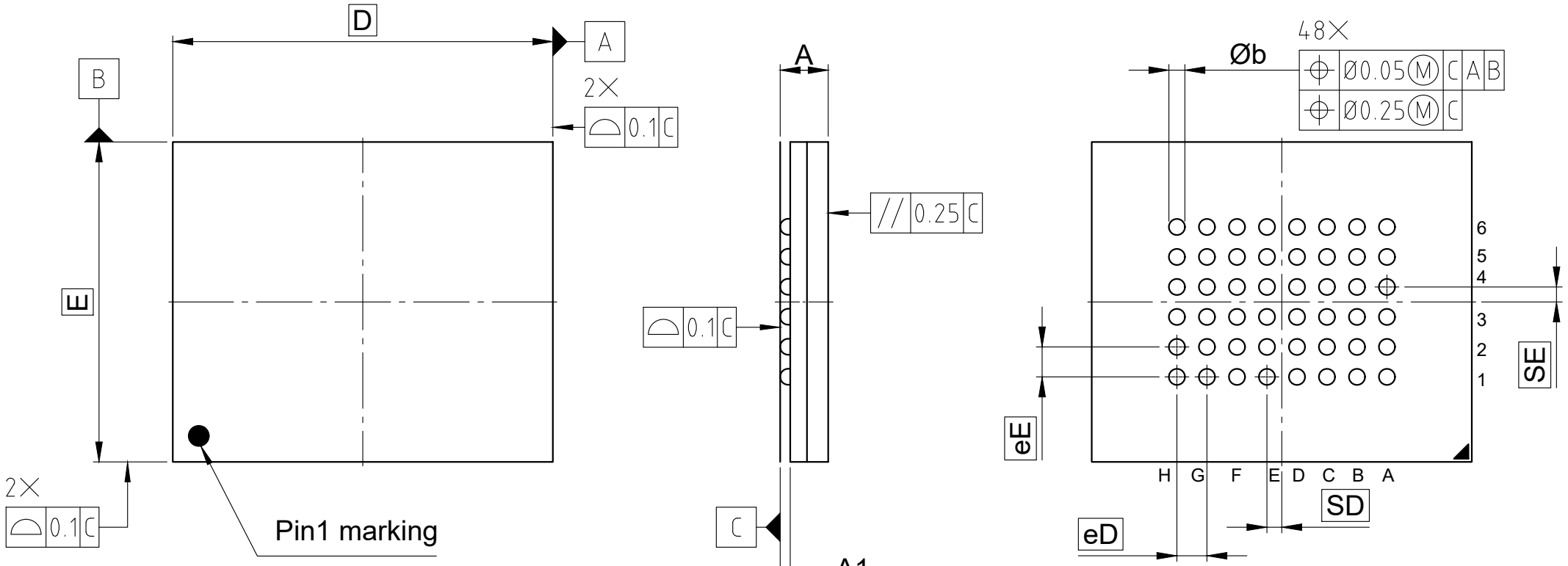


| SYMBOL | DIMENSIONS | | |
|---|---|---|---|
| | MIN. | NOM. | MAX. |
| A | - | - | 1 |
| A1 | 0.16 | 0.21 | 0.26 |
| D | 9.5 BSC | | |
| E | 8 BSC | | |
| Øb | 0.25 | 0.3 | 0.35 |
| eD | 0.75 BSC | | |
| eE | 0.75 BSC | | |
| SD | 0.38 | | |
| SE | 0.38 | | |

All dimensions are in units mm

The drawing is in compliance with ISO 128-30, Projection Method 1 [ ]