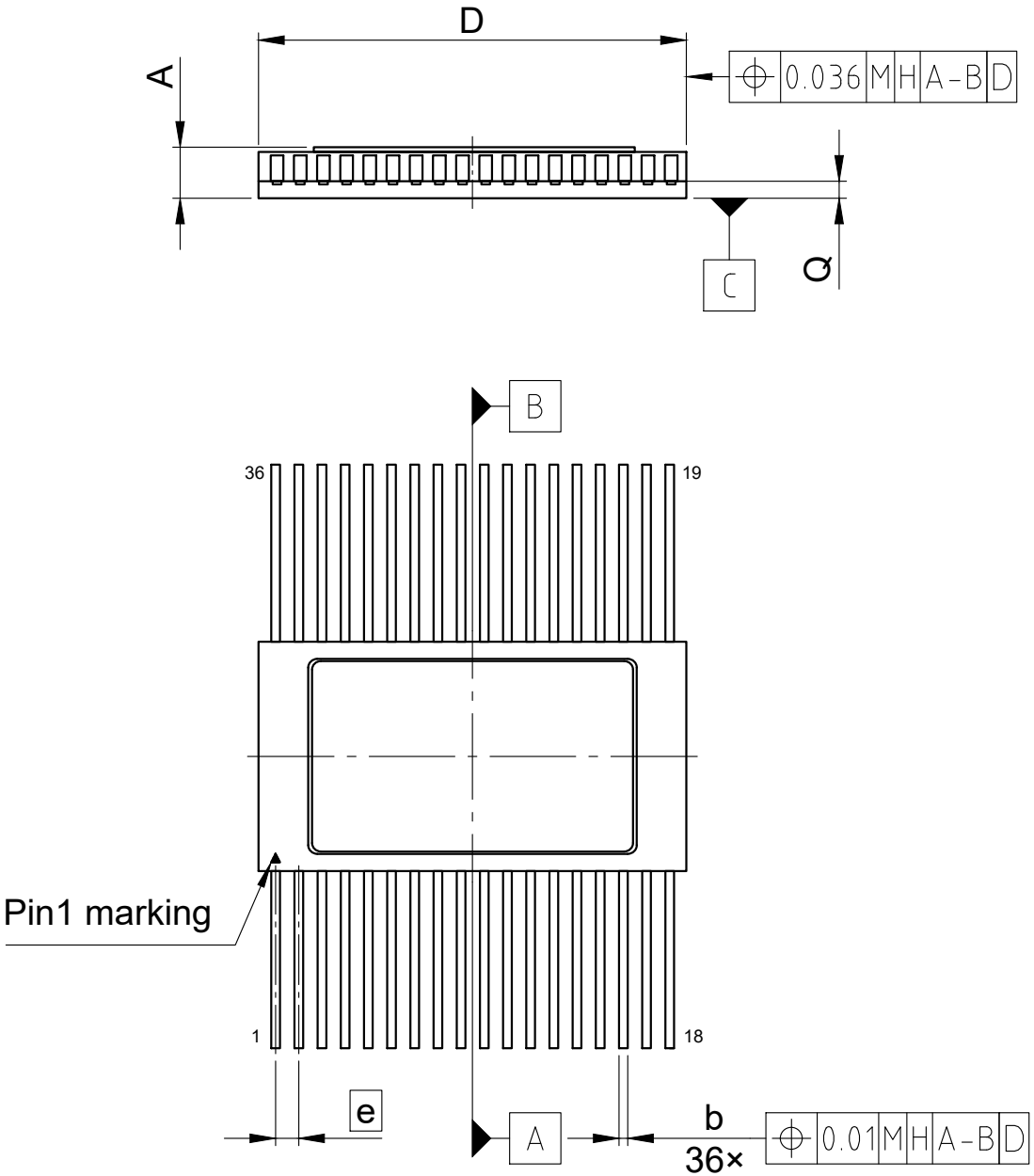

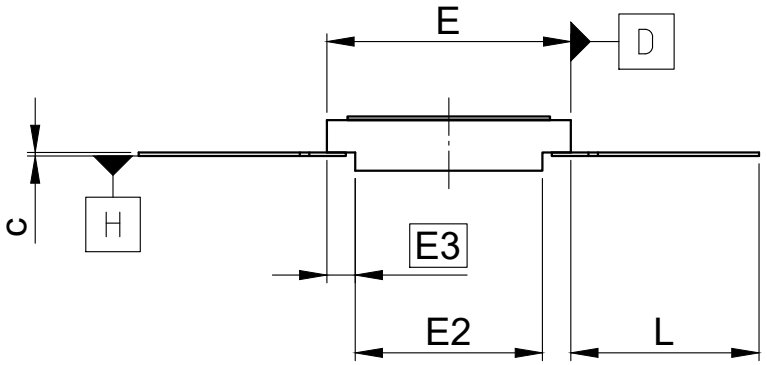

SYMBOL	DIMENSIONS		
	MIN	NOM	MAX
A	2.4	-	2.99
b	0.38	-	0.48
c	0.08	-	0.18
D	23.12	-	23.62
E	11.99	-	13.08
E2	9.78	-	10.04
E3	1.52 BSC		
e	1.27 BSC		
L	8.89	-	10.64
Q	0.64	-	-

All dimensions are in units mm

The drawing is in compliance with ISO 128-30, Projection Method 1 [ ]