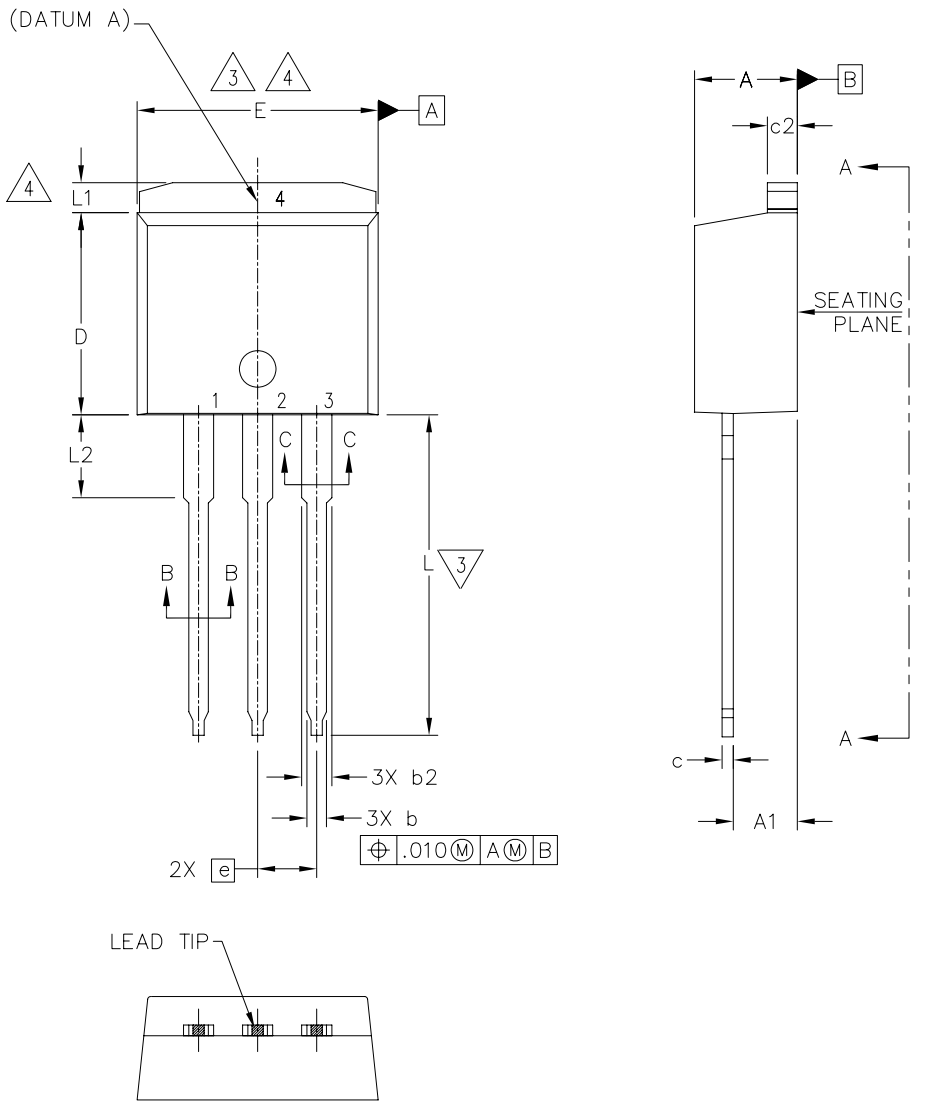

LEGAL NOTICE:

THIS DRAWING AND SPECIFICATIONS ARE THE PROPERTY OF INTERNATIONAL RECTIFIER, ARE ISSUED IN STRICT CONFIDENCE AND SHALL NOT BE REPRODUCED, COPIED OR USED AS THE BASIS FOR THE MANUFACTURE OR SALE OF PRODUCTS WITHOUT WRITTEN PERMISSION FROM INTERNATIONAL RECTIFIER.

INTERNATIONAL RECTIFIER MEXICO
PROLONGACION AV. LOS CABOS NO. 9234
PARQUE INDUSTRIAL PACIFICO II
TIJUANA, BC, MEXICO C.P. 22709
TEL(011 52 664) 626-0804
FAX(011 52 664) 627-8906

EC NO	06-0329	DWG ORIG	JH
EC DATE	08/22/06	ORIG DATE	04/14/93
EC ORIG	MSAUCEDO	UPD BY	MSAUCEDO
EC APP	OAMORES	UPD DATE	08/02/06
DEPT	509	SIZE	ISO A4

GEOMETRICAL DIMENSIONING AND TOLERANCING:
ASME Y14.5M-1994

UNLESS OTHERWISE SPECIFIED ALL DIMENSIONS ARE IN:
MILLIMETERS [INCHES]

UNLESS OTHERWISE SPECIFIED ALL TOLERANCES ARE:

FRAC	ANGLES	FINISH	DECIMALS
N/A	N/A	N/A	MM N/A

THIRD ANGLE PROJECTION

DWG NO	115-0155
DWG REV	06
DWG NAME	TO-262 3 LONG LEADS PACKAGE OUTLINE DRAWING
	INTERNATIONAL RECTIFIER TIJUANA, BC, MEXICO
SCALE	NONE
SHEET	1 OF 3

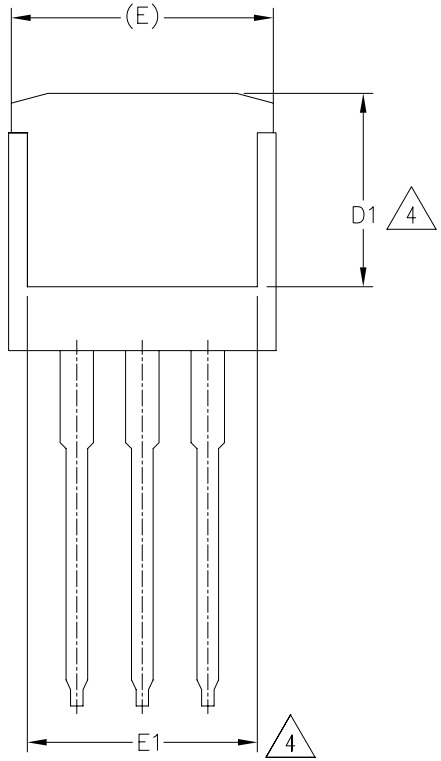

SECTION A–A

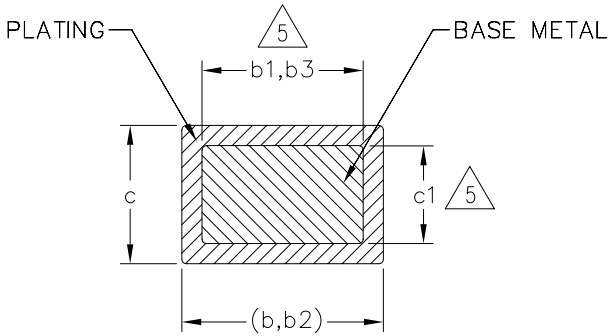

SECTION B–B & C–C
SCALE: NONE

LEGAL NOTICE:

THIS DRAWING AND SPECIFICATIONS ARE THE PROPERTY OF INTERNATIONAL RECTIFIER, ARE ISSUED IN STRICT CONFIDENCE AND SHALL NOT BE REPRODUCED, COPIED OR USED AS THE BASIS FOR THE MANUFACTURE OR SALE OF PRODUCTS WITHOUT WRITTEN PERMISSION FROM INTERNATIONAL RECTIFIER.

INTERNATIONAL RECTIFIER MEXICO
PROLONGACION AV. LOS CABOS NO. 9234
PARQUE INDUSTRIAL PACIFICO II
TIJUANA, BC, MEXICO C.P. 22709
TEL(011 52 664) 626-0804
FAX(011 52 664) 627-8906

EC NO	06-0329	DWG ORIG	JH
EC DATE	08/22/06	ORIG DATE	04/14/93
EC ORIG	MSAUCEDO	UPD BY	MSAUCEDO
EC APP	OAMORES	UPD DATE	08/02/06
DEPT	509	SIZE	ISO A4

GEOMETRICAL DIMENSIONING AND TOLERANCING:
ASME Y14.5M–1994
UNLESS OTHERWISE SPECIFIED ALL DIMENSIONS ARE IN:
MILLIMETERS [INCHES]
UNLESS OTHERWISE SPECIFIED ALL TOLERANCES ARE:

FRAC	ANGLES	FINISH
N/A	N/A	N/A

DECIMALS
MM
N/A

THIRD ANGLE PROJECTION

DWG NO	115-0155
DWG REV	06
DWG NAME	TO-262 3 LONG LEADS PACKAGE OUTLINE DRAWING
	INTERNATIONAL RECTIFIER TIJUANA, BC, MEXICO
SCALE	NONE
SHEET	2 OF 3

SYMBOL	DIMENSIONS				NOTES
	MILLIMETERS		INCHES		
	MIN.	MAX.	MIN.	MAX.	
A	4.06	4.83	.160	.190	
A1	2.03	3.02	.080	.119	
b	0.51	0.99	.020	.039	
b1	0.51	0.89	.020	.035	5
b2	1.14	1.78	.045	.070	
b3	1.14	1.73	.045	.068	5
c	0.38	0.74	.015	.029	
c1	0.38	0.58	.015	.023	5
c2	1.14	1.65	.045	.065	
D	8.38	9.65	.330	.380	3
D1	6.86	–	.270	–	4
E	9.65	10.67	.380	.420	3,4
E1	6.22	–	.245		4
e	2.54 BSC		.100 BSC		
L	13.46	14.10	.530	.555	
L1	–	1.65	–	.065	4
L2	3.56	3.71	.140	.146	

NOTES:

1. DIMENSIONING AND TOLERANCING PER ASME Y14.5M–1994
2. DIMENSIONS ARE SHOWN IN MILLIMETERS [INCHES].
3. DIMENSION D & E DO NOT INCLUDE MOLD FLASH. MOLD FLASH SHALL NOT EXCEED 0.127 [.005"] PER SIDE. THESE DIMENSIONS ARE MEASURED AT THE OUTMOST EXTREMES OF THE PLASTIC BODY.
4. THERMAL PAD CONTOUR OPTIONAL WITHIN DIMENSION E, L1, D1 & E1.
5. DIMENSION b1 AND c1 APPLY TO BASE METAL ONLY.
6. CONTROLLING DIMENSION: INCH.
7. – OUTLINE CONFORM TO JEDEC TO–262 EXCEPT A1(max.), b(min.) AND D1(min.) WHERE DIMENSIONS DERIVED THE ACTUAL PACKAGE OUTLINE.

LEAD ASSIGNMENTS

IGBTs, CoPACK

1.– GATE
2.– COLLECTOR
3.– EMITTER
4.– COLLECTOR

HEXFET

1.– GATE
2.– DRAIN
3.– SOURCE
4.– DRAIN

DIODES

1.– ANODE (TWO DIE) / OPEN (ONE DIE)
2, 4.– CATHODE
3.– ANODE

LEGAL NOTICE:
THIS DRAWING AND SPECIFICATIONS ARE THE PROPERTY OF INTERNATIONAL RECTIFIER, ARE ISSUED IN STRICT CONFIDENCE AND SHALL NOT BE REPRODUCED, COPIED OR USED AS THE BASIS FOR THE MANUFACTURE OR SALE OF PRODUCTS WITHOUT WRITTEN PERMISSION FROM INTERNATIONAL RECTIFIER.

INTERNATIONAL RECTIFIER MEXICO
PROLONGACION AV. LOS CABOS NO. 9234
PARQUE INDUSTRIAL PACIFICO II
TIJUANA, BC, MEXICO C.P. 22709
TEL(011 52 664) 626–0804
FAX(011 52 664) 627–8906

EC NO	06–0329	DWG ORIG	JH
EC DATE	08/22/06	ORIG DATE	04/14/93
EC ORIG	MSAUCEDO	UPD BY	MSAUCEDO
EC APP	OAMORES	UPD DATE	08/02/06
DEPT	509	SIZE	ISO A4

GEOMETRICAL DIMENSIONING AND TOLERANCING: ASME Y14.5M–1994
UNLESS OTHERWISE SPECIFIED ALL DIMENSIONS ARE IN: MILLIMETERS [INCHES]
UNLESS OTHERWISE SPECIFIED ALL TOLERANCES ARE:
FRAC N/A ANGLES N/A FINISH N/A
DECIMALS MM N/A
THIRD ANGLE PROJECTION

DWG NO	115–0155
DWG REV	06
DWG NAME	TO–262 3 LONG LEADS PACKAGE OUTLINE DRAWING
	INTERNATIONAL RECTIFIER TIJUANA, BC, MEXICO
SCALE	NONE
SHEET	3 OF 3