Package Outline

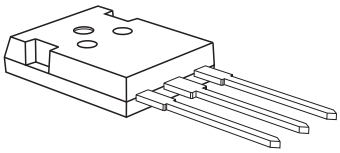

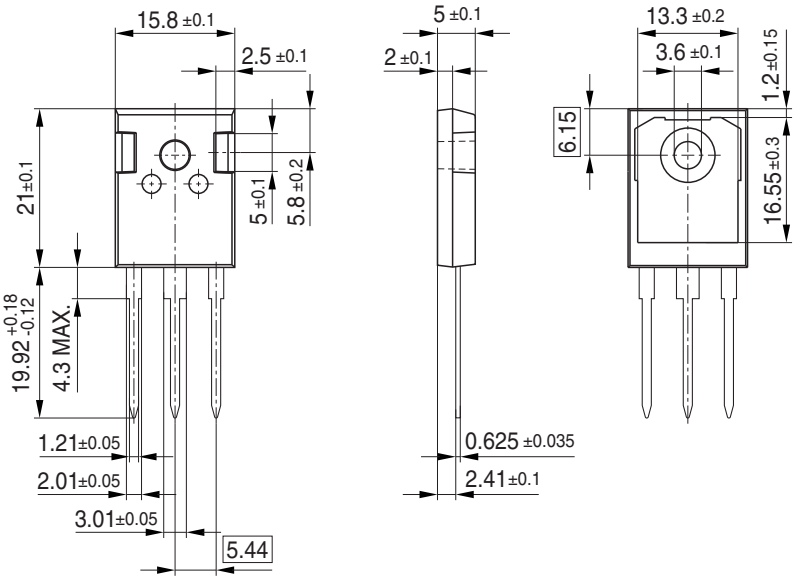

Marking Layout

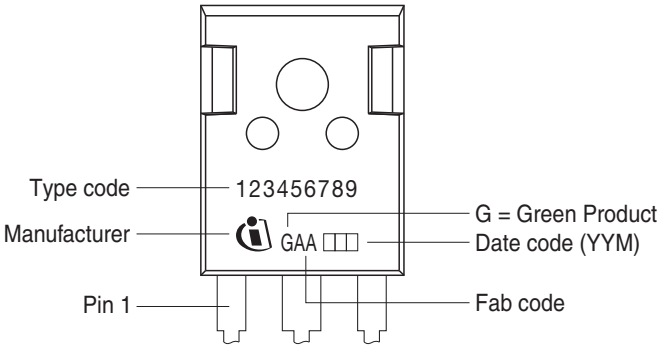

Tube

on demand