Package Outline

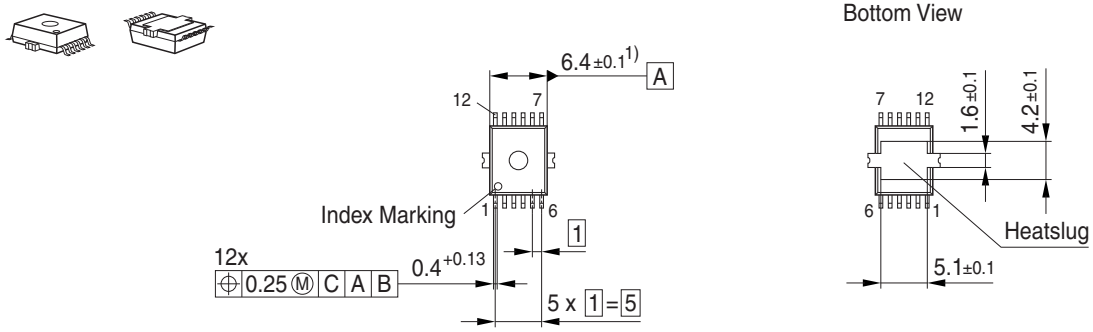

1) Does not include plastic or metal protrusion of 0.15 max. per side

Foot Print

Soldering Type: Reflow Soldering

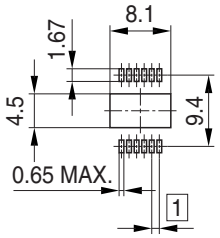

Marking Layout

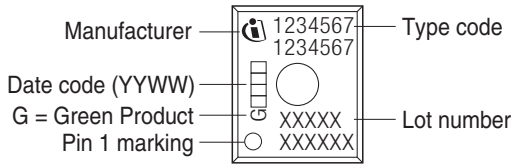

Tape and Reel

Reel ø330 mm: 1.000 Pieces/Reel
Reels/Box: 1

