Package Outline

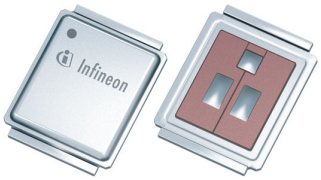

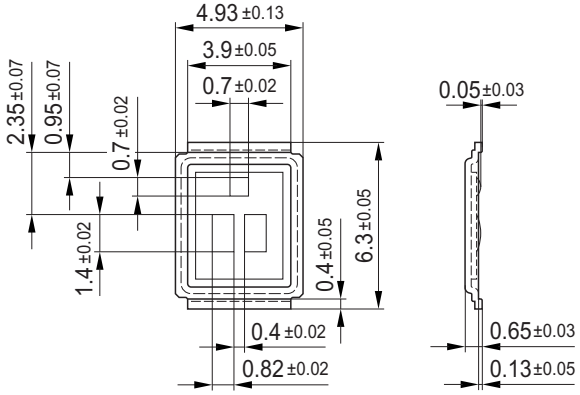

Foot Print

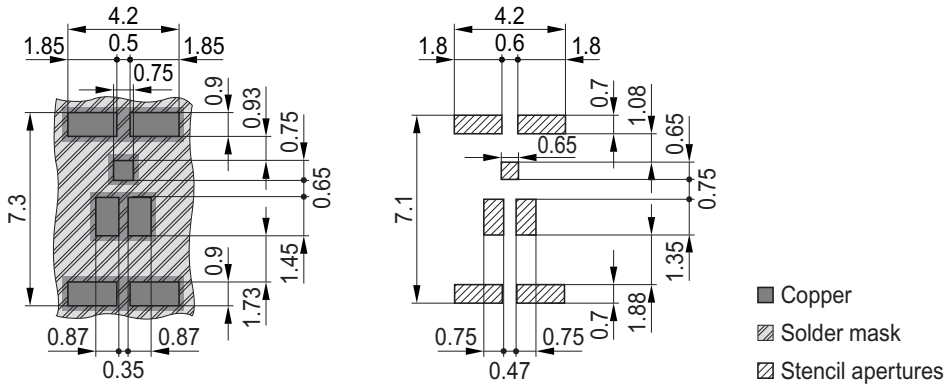

Marking Layout

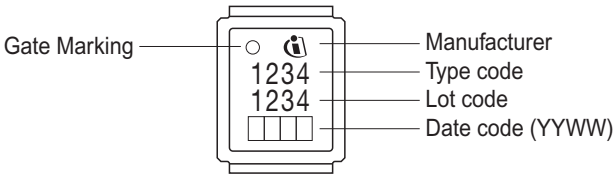

Tape and Reel

Reel ø177 mm: 1.000 Pieces/Reel

