Package Details, SOIC8N

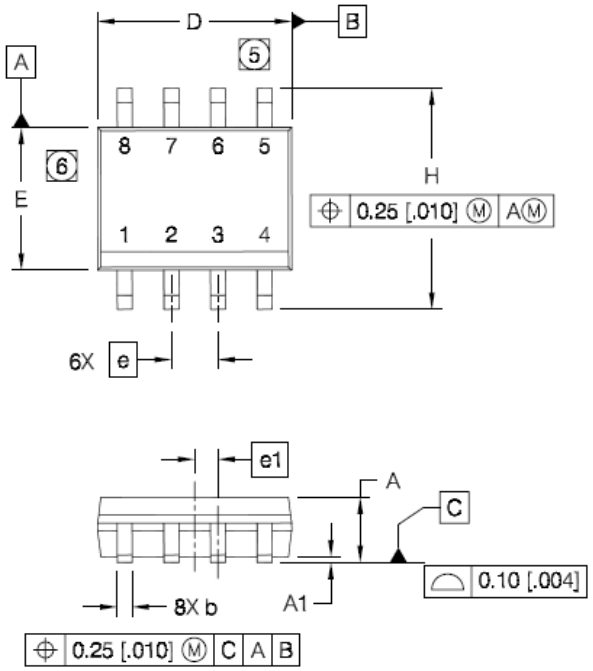

DIM	INCHES		MILLIMETERS	
	MIN	MAX	MIN	MAX
A	.0532	.0688	1.35	1.75
A1	.0040	.0098	0.10	0.25
b	.013	.020	0.33	0.51
c	.0075	.0098	0.19	0.25
D	.189	.1968	4.80	5.00
E	.1497	.1574	3.80	4.00
e	.050 BASIC		1.27 BASIC	
e 1	.025 BASIC		0.635 BASIC	
H	.2284	.2440	5.80	6.20
K	.0099	.0196	0.25	0.50
L	.016	.050	0.40	1.27
y	0°	8°	0°	8°

NOTES:

1. DIMENSIONING & TOLERANCING PER ASME Y14.5M-1994.
2. CONTROLLING DIMENSION: MILLIMETER
3. DIMENSIONS ARE SHOWN IN MILLIMETERS [INCHES].
4. OUTLINE CONFORMS TO JEDEC OUTLINE MS-012AA.

5. DIMENSION DOES NOT INCLUDE MOLD PROTRUSIONS. MOLD PROTRUSIONS NOT TO EXCEED 0.15 [.006].

6. DIMENSION DOES NOT INCLUDE MOLD PROTRUSIONS. MOLD PROTRUSIONS NOT TO EXCEED 0.25 [.010].

7. DIMENSION IS THE LENGTH OF LEAD FOR SOLDERING TO A SUBSTRATE.

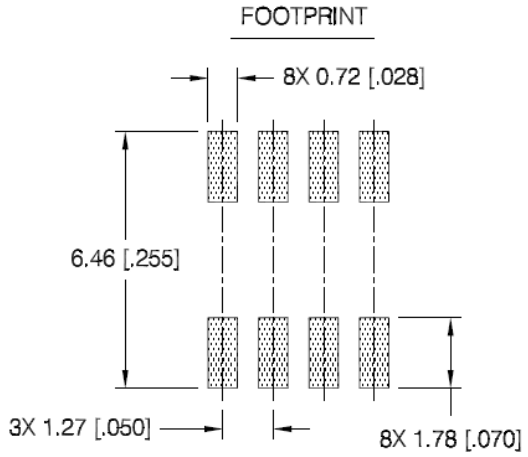

 © 2013 International Rectifier