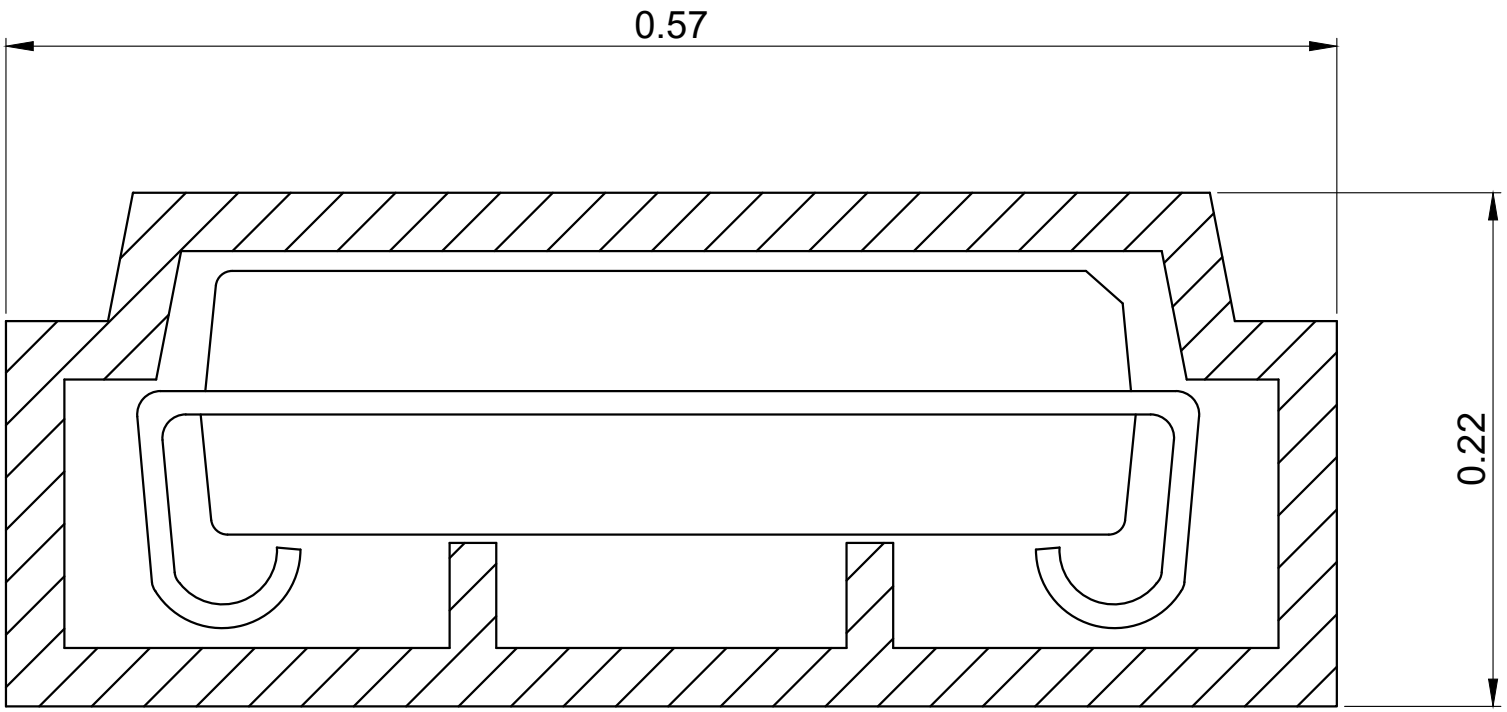

All dimensions are in units inches
The drawing is in compliance with ISO 128-30, Projection Method 1 [ ]