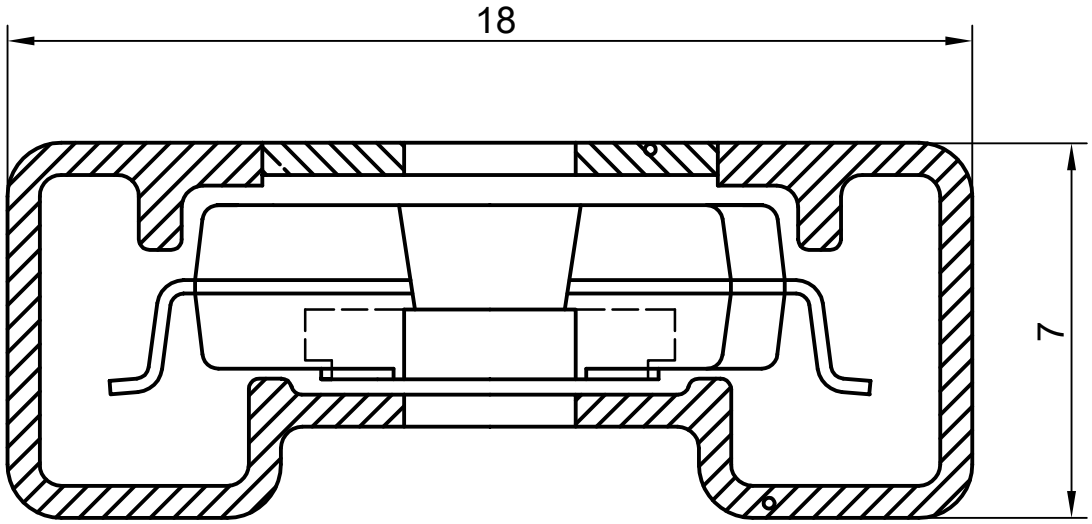

ALL DIMENSIONS ARE IN UNITS MM