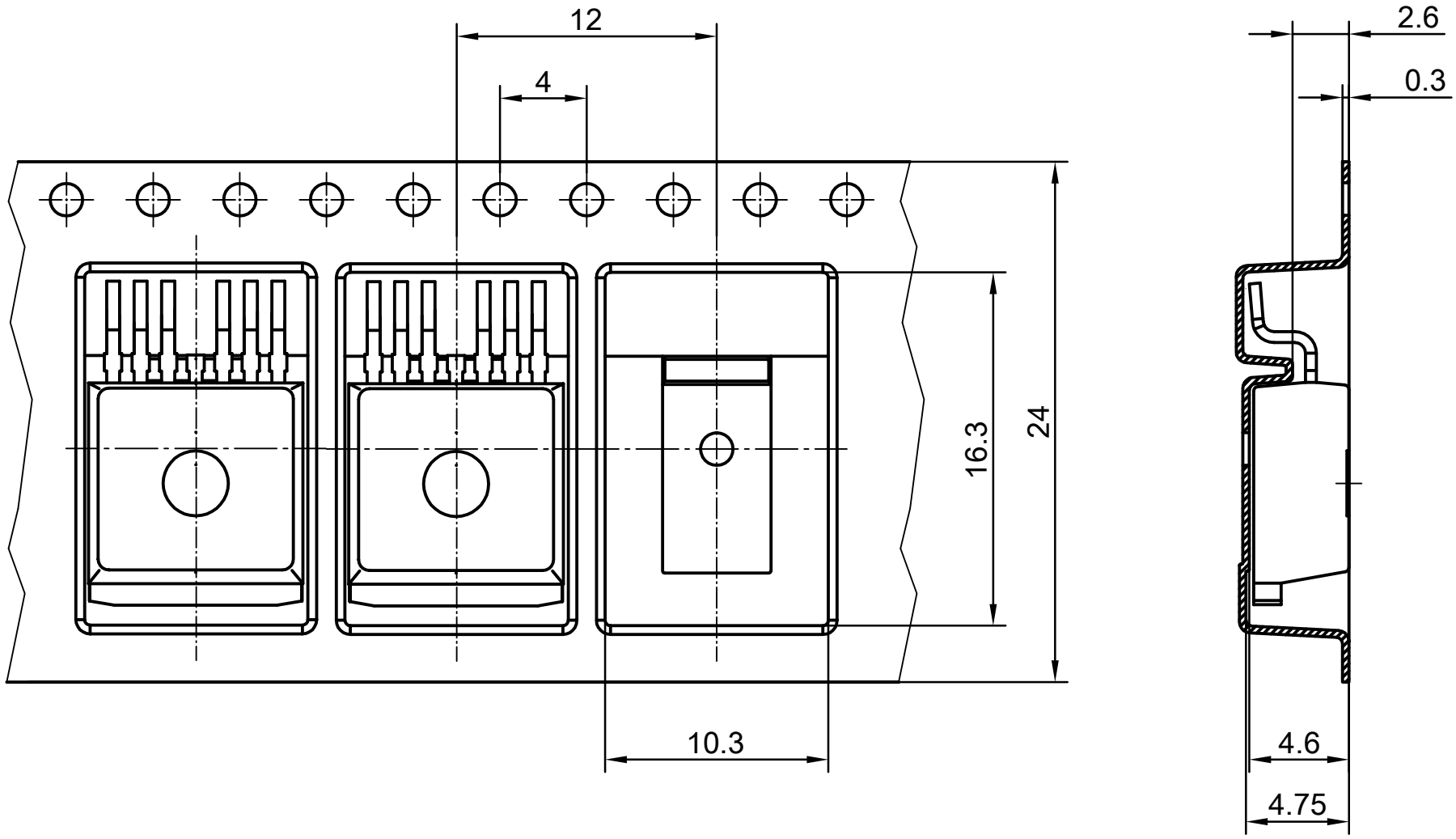

ALL DIMENSIONS ARE IN UNITS MM

THE DRAWING IS IN COMPLIANCE WITH ISO 128 & PROJECTION METHOD 1 [ ]