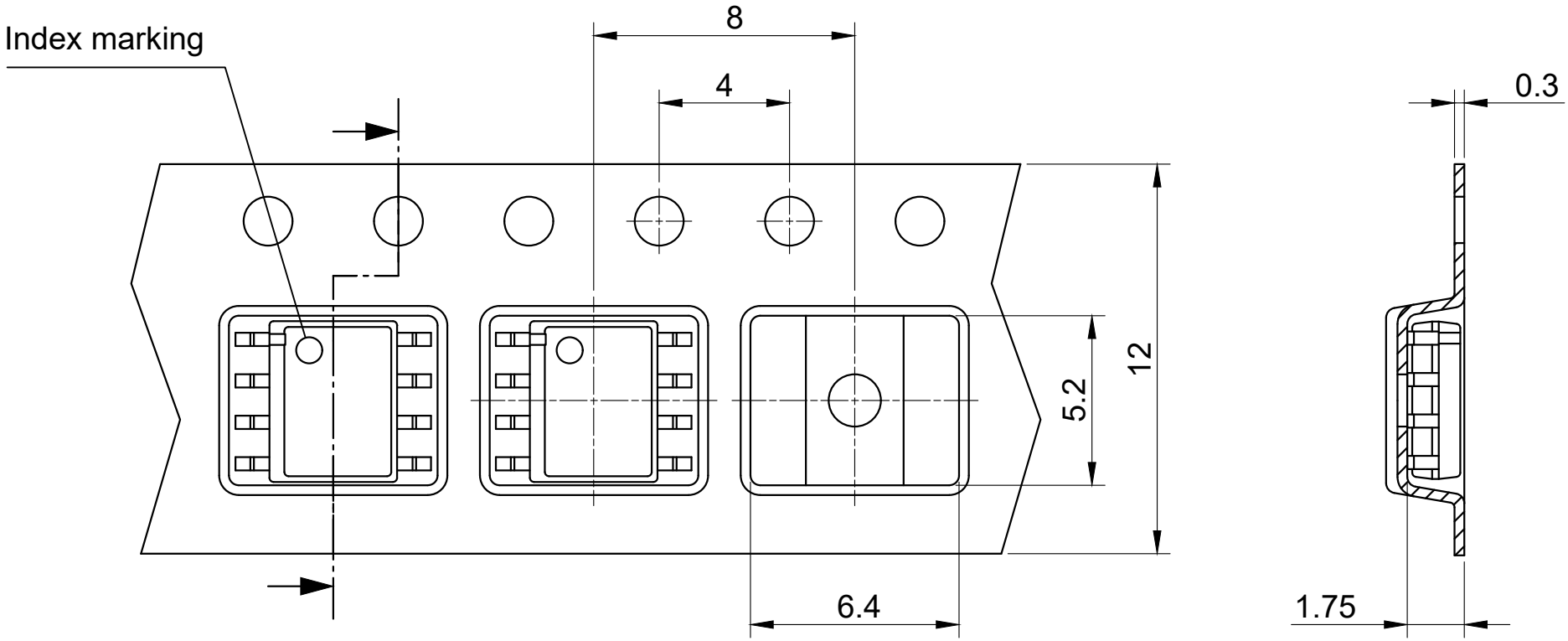


All dimensions are in units mm

The drawing is in compliance with ISO 128 & Projection Method 1 [ ]