Package Outline 5x6

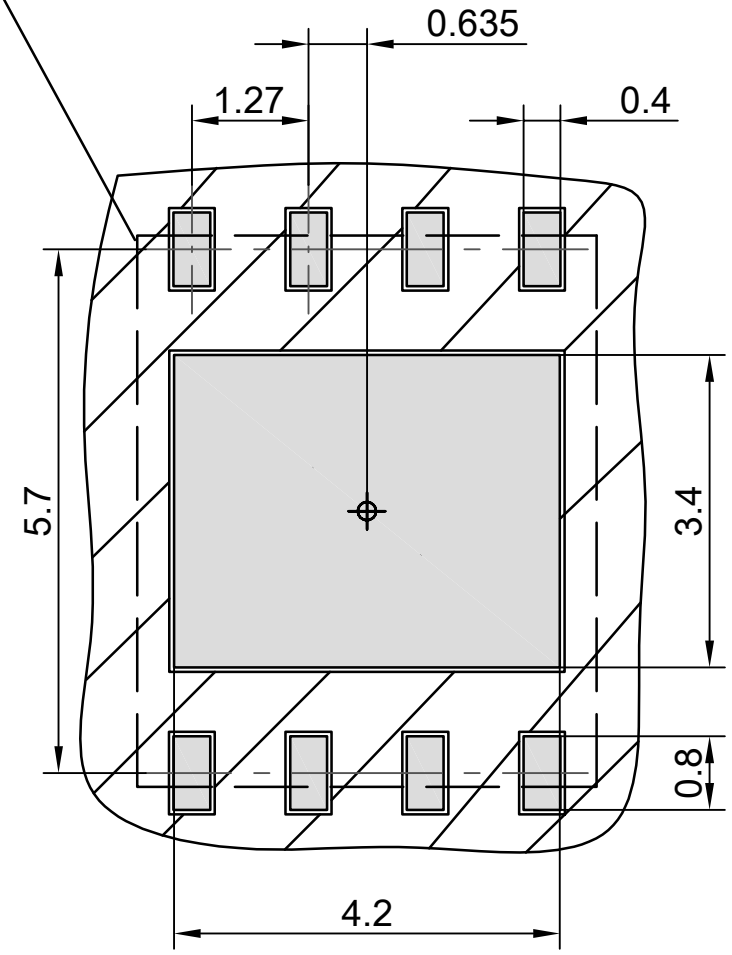

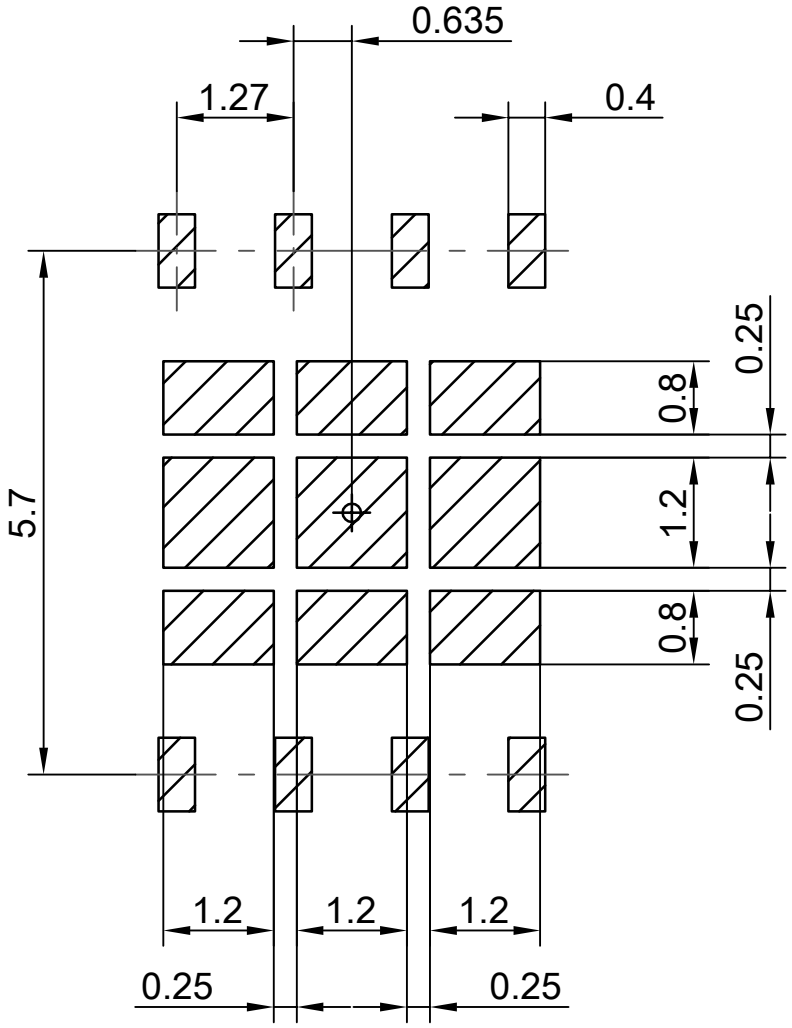

copper

solder mask

stencil apertures

ALL DIMENSIONS ARE IN UNITS MM