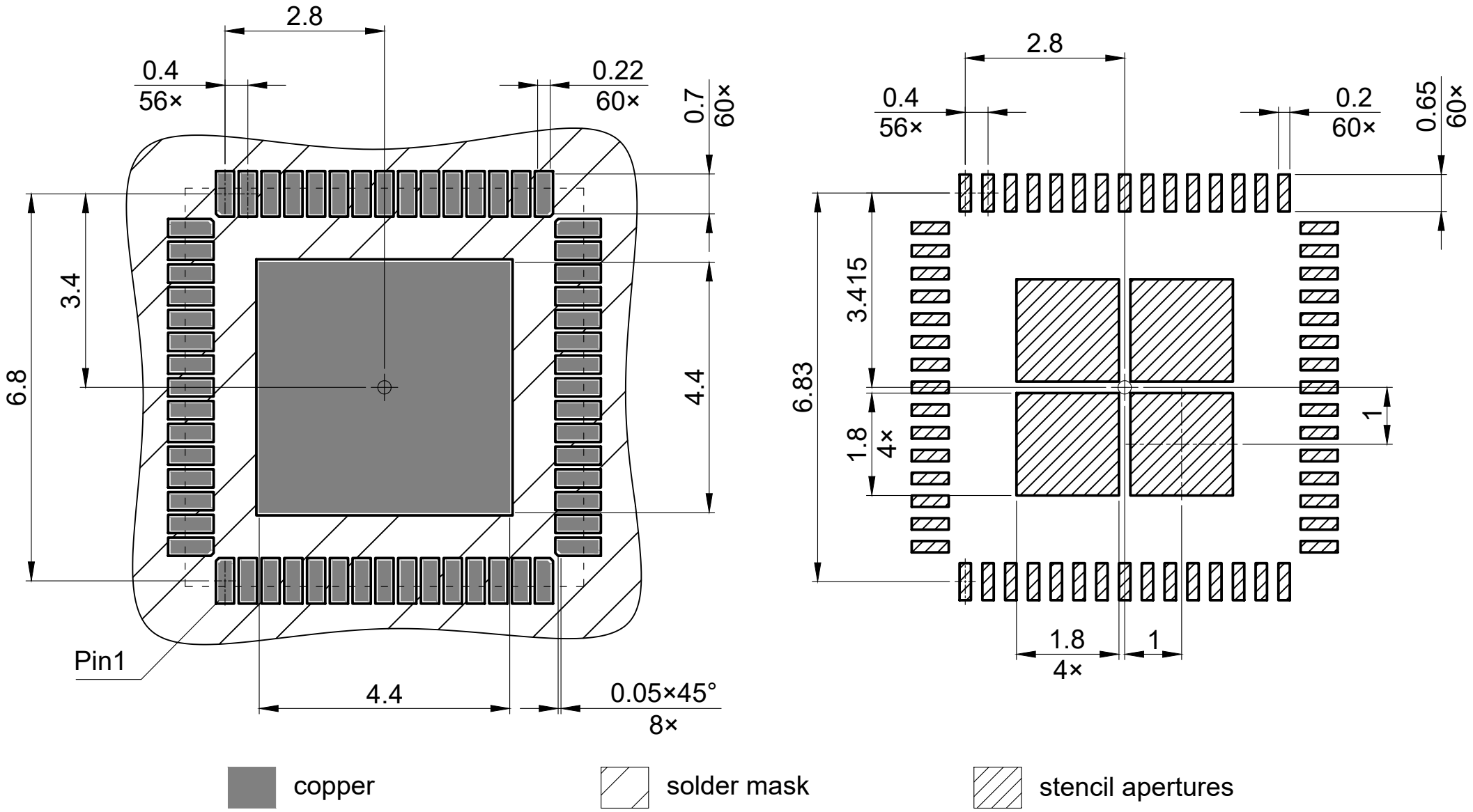

All dimensions are in units mm
All pads are non-solder mask defined