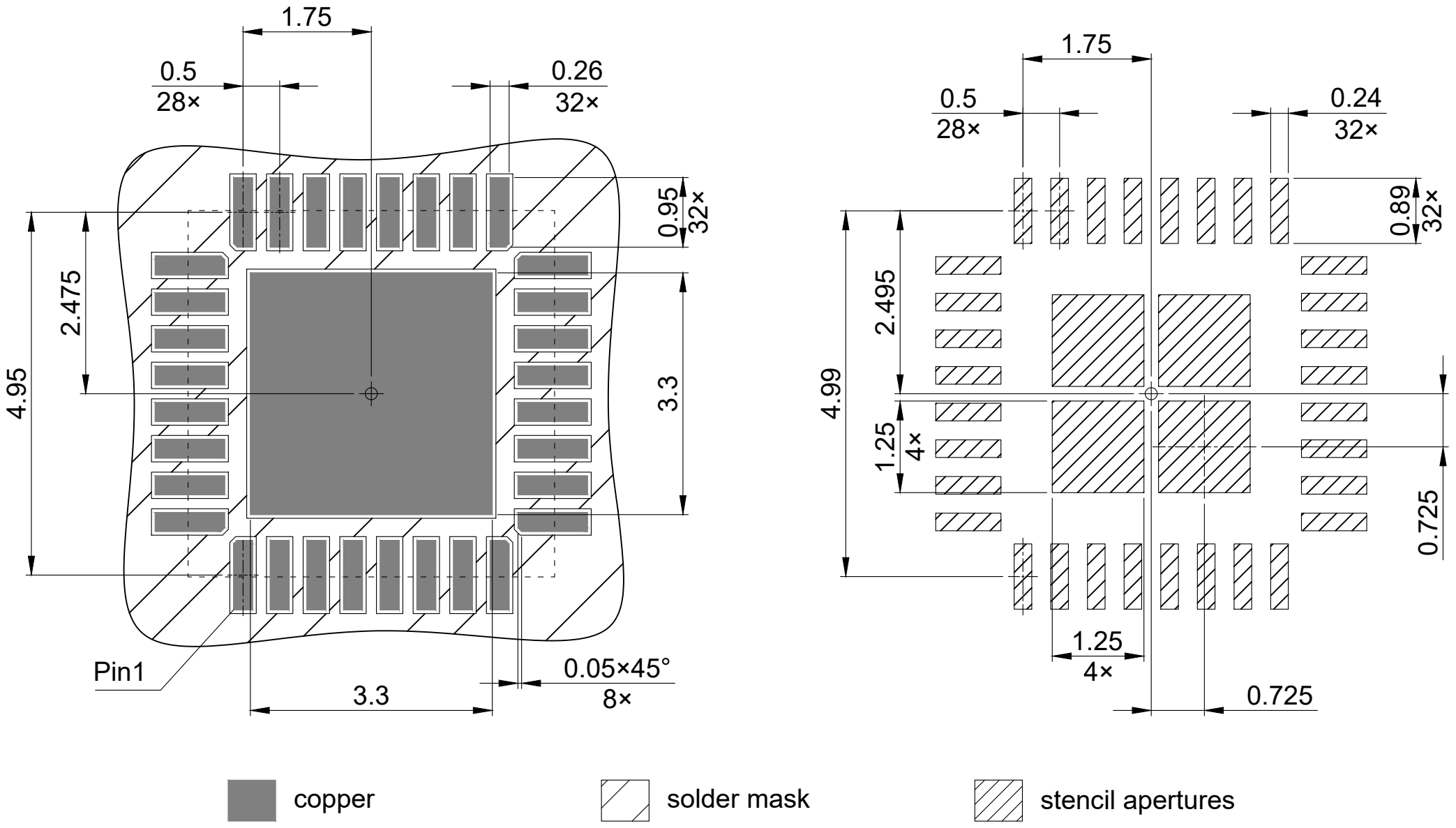

All dimensions are in units mm
Based on stencil thickness 0.13 mm
All pads are non-solder mask defined